# Vector inverter for lifts with **asynchronous motors**

SIEDrive

# ADL300

.... Functions description and parameters list

GEFRAN

# Information about this manual

This manual explains the functions and the description of the parameters.

The informations about mechanical installation, electrical connection and fast start-up can be found on the ADL300 Quick start guide.

The whole set of manuals can be found on the CD provided with the dirve.

**Software version**

This manual is updated according the software version V 4.0.4 .

The identification number of the software version is indicated on the identification plate of the drive or can be checked with the PAR 490 **Firmware ver.rel** parameter, menu 2.7.

**General information**

**Note !** In industry, the terms “Inverter”, “Regulator” and “Drive” are sometimes interchanged. In this document, the term “Drive” will be used.

Before using the product, read the safety instruction section carefully. Keep the manual in a safe place and available to engineering and installation personnel during the product functioning period.

Gefran Drives and Motion S.r.l. has the right to modify products, data and dimensions without notice. The data can only be used for the product description and they can not be understood as legally stated properties.

Thank you for choosing this Gefran product.

We will be glad to receive any possible information which could help us improvingthis manual.

The e-mail address is the following: techdoc@gefran.com.

All rights reserved.

## Table of Contents


**Information about this manual....2**
Symbols used in the manual....4

**A - Programming....5**
A.1 Asynchronous/Synchronous selection....5
A.2 Menu display modes....5
A.3 Programming of “function block” analog and digital input signals....5
A.4 Variable interconnections mode....5

**B - Parameters and functions description (Expert list)....7**
Legend....7
1 - MONITOR....8
2 - DRIVE INFO....10
3 - STARTUP WIZARD....13
4 - DRIVE CONFIG....14
5 - LIFT....18
5.1 – SPEED....18
5.2 – RAMPS....20
5.3 – LIFT SEQUENCES....22
5.4 – MECHANICAL DATA....27
5.5 – DISTANCE....29
5.6 – EMERGENCY MODE....35
5.7 – INPUT/OUTPUT....37
5.8 –PRE - TORQUE....48
5.9 – LIFT ALARMS....50
6 -....53
7 -....53
8 -....53
9 -....53
10 - DIGITAL INPUTS....54
11 - DIGITAL OUTPUTS....55
12 - ANALOG INPUTS....56
13 - ANALOG OUTPUTS....59
14 - MOTOR DATA....61
15 - ENCODER CONFIG....65
16 - SPEED REG GAINS....69
17 - REGULATOR PARAM....73
18 - TORQUE CONFIG....78
19 - VF PARAMETERS....80
20 - FUNCTIONS....83
20.1 - FUNCTIONS/INERTIA COMP....83
20.2 - FUNCTIONS/DC BRAKING....83
20.3 - FUNCTIONS/MOTOR OVERLOAD....85
20.4 - FUNCTIONS/BRES OVERLOAD....87
20.5 - FUNCTIONS/DOUBLE PAR SET....88
20.6 - FUNCTIONS/SPEED CAPTURE....89
20.7 - FUNCTIONS/COMPARE....89
20.8 - FUNCTIONS/PADS....90
20.9 - FUNCTIONS/DIRECTION COUNT....91
21 - COMMUNICATION....94
21.1 - COMMUNICATION/RS232....94
21.2 - COMMUNICATION/FIELDBUS CONFIG....94
21.3 - COMMUNICATION/FIELDBUS M2S....95
21.4 - COMMUNICATION/FIELDBUS S2M....97
21.5 - COMMUNICATION/WORD COMP....99
21.6 - COMMUNICATION/WORD COMP....100
22 - ALARM CONFIG....102
23 - ALARM LOG....111
PARAMETERS ON SELECTION LISTS, BUT NOT DISPLAYED ON KEYPAD....112

**C - SELECTION LISTS....116**
L_ANOUT....116
L_CMP....116
L_DIGSEL1....116
L_DIGSEL2....117
L_DIGSEL3....117
L_FBS2M....117
L_LIM....118
L_MLTREF....118
L_REF....118

L_SCOPE ..... 118
L_VREF ..... 118
L_WDECOMP ..... 118

**D - Block Diagrams ..... 120**
System diagram index ..... 120
Drive overview (DrvOverview) ..... 120
ADL1 application index (ADL1FuncIndex) ..... 121
Expansion card digital inputs (DigImpExp) ..... 124
Expansion card digital outputs (DigOutExp) ..... 125
Analog inputs ..... 126
Analog outputs ..... 127
Encoder config ..... 128
SLS control (ControlVf) ..... 129
Functions ..... 130
Torque control (TorqueCtrl) ..... 133
Gains adaptive (GainAdapt) ..... 133

**Appendix - 1.0 CANopen interface ..... 135**
1.1 CANopen functions ..... 135
1.2 CANopen management ..... 138
1.3 Process Data Channel Control ..... 139
1.4 SDO management ..... 140
1.5 Alarms ..... 142
1.6 Configuration example ..... 143

## Symbols used in the manual

**Warning**

Indicates a procedure, condition, or statement that, if not strictly observed, could result in personal injury or death.

*Indique le mode d'utilisation, la procédure et la condition d'exploitation. Si ces consignes ne sont passtrictement respectées, il y a des risques de blessures corporelles ou de mort.*

**Caution**

Indicates a procedure, condition, or statement that, if not strictly observed, could result in damage to or destruction of equipment.

*Indique et le mode d'utilisation, la procédure et la condition d'exploitation. Si ces consignes ne sont pas strictement respectées, il y a des risques de détérioration ou de destruction des appareils.*

Indicates that the presence of electrostatic discharge could damage the appliance. When handling the boards, always wear a grounded bracelet.

*Indique que la présence de décharges électrostatiques est susceptible d'endommager l'appareil. Toujours porter un bracelet de mise à la terre lors de la manipulation des cartes.*

**Attention**

Indicates a procedure, condition, or statement that should be strictly followed in order to optimize these applications.

*Indique le mode d'utilisation, la procédure et la condition d'exploitation. Ces consignes doivent êtrerigoureusement respectées pour optimiser ces applications.*

**Note !**

Indicates an essential or important procedure, condition, or statement.

*Indique un mode d'utilisation, de procédure et de condition d'exploitation essentiels ou importants.*

# A - Programming

## A.1 Asynchronous/Synchronous selection

The ADL300 is factory-set to operate in asynchronous motor control mode.

To switch to the synchronous motor control mode, set PAR 6100 **Load synch control** (Menu 4 - DRIVE CONFIG). For information on switching control mode via keypad, reference should be made to the ADL300 Quick Start Guide (via integrated keypad, see paragraph 8.2.9; via optional keypad, see paragraph 8.3.15).

**Note!** If synchronous motor control is selected, use the ADL300 Description of functions and list of parameters – Vector inverter for lifts with synchronous motors manual

## A.2 Menu display modes

The programming menu can be displayed in two modes, which can be selected using the Access mode parameter (04 - DRIVE CONFIG menu):

- **Easy** (default) only the main parameters are displayed.
- **Expert** all the parameters are displayed.

## A.3 Programming of "function block" analog and digital input signals

The signals, variables and parameters of each single "function block" of the drive are interconnected in order to achieve the configurations and controls inside the control system.

These can be managed and modified using the keypad, PC configurator or fieldbus programming.

The programming mode is based on the following logic:

**Src** (source; i.e.: **Ramp ref 1 src**, PAR: 610)

This term defines ***the source of the function block input***, i.e. the signal to be processed in the function block.

The different configurations are defined in the relative ***selection lists***.

**Mon** (display; i.e.: **Ramp ref 1 mon**, PAR: 620)

This term refers to the ***variable output from the function block, which is the result of the calculations performed on the actual block***.

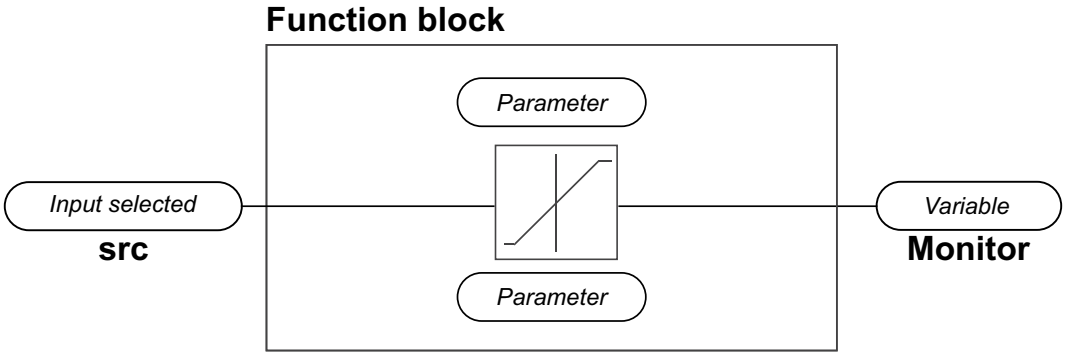


## A.4 Variable interconnections mode

The **source (src)** allows the desired control signal to be assigned to the function block input.

This operation is performed by using specific selection lists.

Possible control signal sources:

**1 – Physical terminal**

The analog and digital signals come from the terminal strip of the regulation card and/or from those of the expansion cards.

**2 – Drive internal variables**

Internal drive control system variables, from “function block” calculations, sent via keypad, PC configurator or fieldbus.

**Practical example**

The following examples illustrate the philosophies and methods with which more or less complex operations are performed in the single “function blocks”, the results of which represent the output of the block.

## • *Example: Changing the Speed Reference source*

The main drive reference (in the default configuration) **Ramp ref 1 mon** (PAR: 620) is generated by the output of the function block “**Ramp setpoint Block**”.

Its default source is the **Analog input 1 mon** signal (PAR: 1500), from the output of the function block “**Analog input 1 Block**”, which in this case refers to analog input 1 of the signal terminal strip.

To change the reference source from the analog input to a digital reference inside the drive, the input signal must be changed to “**Ramp setpoint Block**”.

Enter the **Ramp ref 1 src** parameter (PAR: 610) and set a new reference, selecting it from among those listed in the L_MLTREF selection list, for example **Dig ramp ref 1** (PAR: 600).

## • *Example: Inverting the analog reference signal*

To invert the “**Analog input 1X Block**” output signal, the value of the **An inp 1X sign src** parameter (PAR: 1626), which has a default setting of Null (no operation), must be changed by selecting the source of the command signal from among those listed in the L_DIGSEL 2 selection list, for example **Digital input X mon**, **One** (function always enabled), etc.

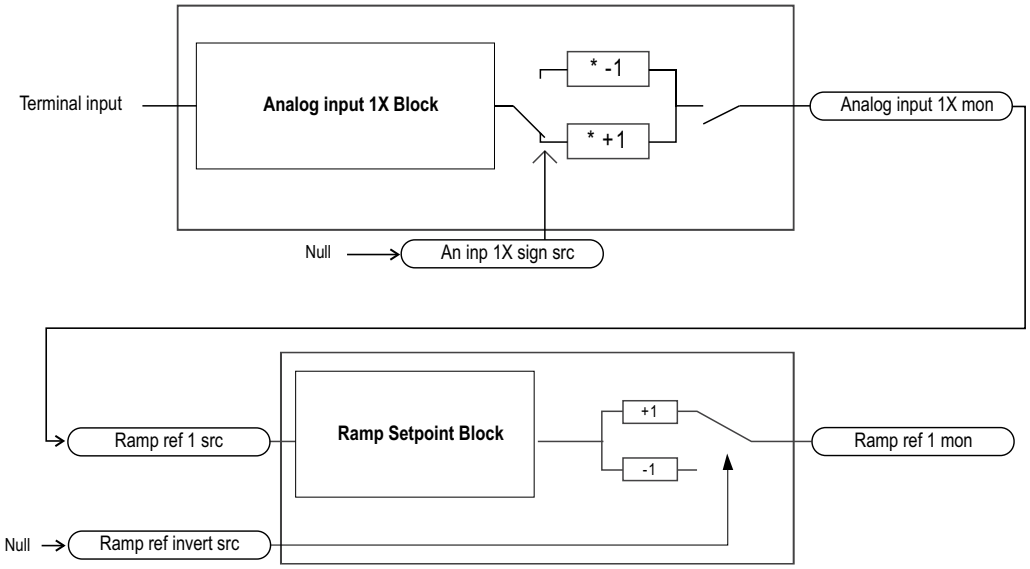


The diagrams above illustrate the internal processing philosophy of the single “function blocks” and the result of these changes on the other interconnected “function blocks”.

**Note !** This section contains a brief description of the functions of the other parameters in the function blocks not included for the changes in the example.

The **Ramp ref invert src** parameter (PAR: 616) can be used to select the source for the command to reverse the “**Ramp setpoint**” function block output.

The output signal from the “**Ramp setpoint**” block is displayed in the **Ramp ref 1 mon** parameter (PAR: 620).

## B - Parameters and functions description (Expert list)

### Legend

| ⓪ | ❶ | ❷ | ❸ | ❹ | ❺ | ❻ | ❼ | ❽ | ❾ | ❿ |
|---|---|---|---|---|---|---|---|---|---|---|
| Menu | PAR | Description | UM | Type | FB BIT | Def | Min | Max | Acc | Mod |
| **1 - MONITOR** | | | | | | *( Level 1 menu)* | | | | |
| **1.1** | **250** | **Output current** | A | FLOAT | 16/32 | 0.0 | 0.0 | 0.0 | R | FVS |
| 1.2 | 252 | Output voltage | V | FLOAT | 16/32 | 0.0 | 0.0 | 0.0 | R | FVS |
| **21.5 - COMMUNICATION/WORD COMP** | | | | | | *( Level 2 menu )* | | | | |
| **21.5.1** | **4400** | **Word bit0 src** | | **LINK** | **16BIT** | **6000** | **0** | **16384** | **ERW** | **FVS** |
| **21.5.16** | **4430** | **Word bit15 src** | | LINK | 16BIT | 6000 | 0 | 16384 | ERW | FVS |
| | | | | L_DIGSEL1 | | *( Selection List ) [*]* | | | | |

| | | |
|---|---|---|
| ⓪ | Indexing of the menu and parameter | |
| ❶ | Parameter identifier | |
| ❷ | Parameter description | |
| ❸ | UM: unit of measure | |
| ❹ | Type of parameter<br><br>BIT Boolean, from modbus seen as 16 bits<br>ENUM Selection list, from modbus seen as 16 bits<br>FLOAT Real, from modbus seen as 32 bits<br>INT16 Integer with sign 16 bits, from modbus seen as 16 bits<br>INT32 Integer with sign 32 bits, from modbus seen as 32 bits<br>ILINK Selection list, from modbus seen as 16 bits<br>LINK Selection list, from modbus seen as 16 bits<br>UINT16 Integer without sign 16 bits, from modbus seen as 16 bits<br>UINT32 Integer without sign 32 bits, from modbus seen as 32 bits | |
| ❺ | Format of data exchanged on Fieldbus (16BIT, 32BIT) | |
| ❻ | Default value | CALCF Value calculated as a number with floating point<br>CALCI Value calculated as a whole number<br>SIZE Value depending on the size of the drive |
| ❼ | Minimum value | |
| ❽ | Maximum value | |

| | |
|---|---|
| ❾ | Accessibility :<br><br>E Expert<br>R Read<br>S Size (set value depending on the size of the device)<br>W Write (scrittura)<br>Z parameters that can be modified ONLY with the drive disabled |
| ❿ | Available in regulation mode:<br><br>V = V/f Control (open loop) / PM synchronous<br>S = Vect Flux OL<br>F = Vect Flux CL (closed loop) |
| [*] | **Selection lists:**<br>The “Sorgente.../Sorg...” format parameters are linked to a selection list.<br>The source of the signal that will control the parameter can be selected from the list indicated.<br>The lists are indicated in paragraph C of this manual. |

# 1 - MONITOR

| Menu | PAR | Description | UM | Type | FB BIT | Def | Min | Max | Acc | Mod |
|---|---|---|---|---|---|---|---|---|---|---|
| **1.1** | **250** | **Output current** | A | FLOAT | 16/32BIT | 0.0 | 0.0 | 0.0 | R | FVS |

The drive output current is displayed.

| Menu | PAR | Description | UM | Type | FB BIT | Def | Min | Max | Acc | Mod |
|---|---|---|---|---|---|---|---|---|---|---|
| **1.2** | **252** | **Output voltage** | V | FLOAT | 16/32BIT | 0.0 | 0.0 | 0.0 | R | FVS |

The drive line voltage output is displayed.

| Menu | PAR | Description | UM | Type | FB BIT | Def | Min | Max | Acc | Mod |
|---|---|---|---|---|---|---|---|---|---|---|
| **1.3** | **254** | **Output frequency** | Hz | FLOAT | 16/32BIT | 0.0 | 0.0 | 0.0 | R | FVS |

The drive output frequency is displayed.

| Menu | PAR | Description | UM | Type | FB BIT | Def | Min | Max | Acc | Mod |
|---|---|---|---|---|---|---|---|---|---|---|
| **1.4** | **628** | **Ramp setpoint** | rpm | INT16 | 16/32BIT | 0 | 0 | 0 | R | FVS |

The ramp reference is displayed. This is the speed value the drive must reach at the end of the ramp.

| Menu | PAR | Description | UM | Type | FB BIT | Def | Min | Max | Acc | Mod |
|---|---|---|---|---|---|---|---|---|---|---|
| **1.5** | **664** | **Speed setpoint** | rpm | INT16 | 16/32BIT | 0 | 0 | 0 | R | FVS |

The speed reference is displayed. This is the value measured at the output of the speed reference circuit.

| Menu | PAR | Description | UM | Type | FB BIT | Def | Min | Max | Acc | Mod |
|---|---|---|---|---|---|---|---|---|---|---|
| **1.6** | **260** | **Motor speed** | rpm | INT16 | 16/32BIT | 0 | 0 | 0 | R | FVS |

The actual output speed of the motor is displayed (in FOC = speed measured by the encoder, in SLS/VF = speed estimated by the drive).

| Menu | PAR | Description | UM | Type | FB BIT | Def | Min | Max | Acc | Mod |
|---|---|---|---|---|---|---|---|---|---|---|
| **1.7** | **270** | **DC link voltage** | V | FLOAT | 16/32BIT | 0.0 | 0.0 | 0.0 | ER | FVS |

The direct voltage of the intermediate circuit capacitors is displayed (DC-Bus).

| Menu | PAR | Description | UM | Type | FB BIT | Def | Min | Max | Acc | Mod |
|---|---|---|---|---|---|---|---|---|---|---|
| **1.8** | **272** | **Heatsink temperature** | °C | INT16 | 16BIT | 0 | 0 | 0 | ER | F_S |

The temperature measured by the linear sensor integrated in the IGBT modules is displayed.

| Menu | PAR | Description | UM | Type | FB BIT | Def | Min | Max | Acc | Mod |
|---|---|---|---|---|---|---|---|---|---|---|
| **1.9** | **280** | **Torque current ref** | A | FLOAT | 16/32BIT | 0.0 | 0.0 | 0.0 | ER | F_S |

The current reference used for torque control is displayed (in the sensorless vector and field-oriented vector modes).

| Menu | PAR | Description | UM | Type | FB BIT | Def | Min | Max | Acc | Mod |
|---|---|---|---|---|---|---|---|---|---|---|
| **1.10** | **282** | **Magnet current ref** | A | FLOAT | 16/32BIT | 0.0 | 0.0 | 0.0 | ER | FVS |

The magnetizing current reference is displayed (in the sensorless vector and field-oriented vector modes).

| Menu | PAR | Description | UM | Type | FB BIT | Def | Min | Max | Acc | Mod |
|---|---|---|---|---|---|---|---|---|---|---|
| **1.11** | **284** | **Torque current** | A | FLOAT | 16/32BIT | 0.0 | 0.0 | 0.0 | ER | FVS |

The actual torque current value is displayed.

| Menu | PAR | Description | UM | Type | FB BIT | Def | Min | Max | Acc | Mod |
|---|---|---|---|---|---|---|---|---|---|---|
| **1.12** | **286** | **Magnet current** | A | FLOAT | 16/32BIT | 0.0 | 0.0 | 0.0 | ER | FVS |

The actual magnetizing current value is displayed.

| Menu | PAR | Description | UM | Type | FB BIT | Def | Min | Max | Acc | Mod |
|---|---|---|---|---|---|---|---|---|---|---|
| **1.13** | **3212** | **Motor overload accum** | | UINT16 | 16/32BIT | 0 | 0 | 100 | ER | FVS |

The motor overload level is displayed (100% = alarm threshold).

| Menu | PAR | Description | UM | Type | FB BIT | Def | Min | Max | Acc | Mod |
|---|---|---|---|---|---|---|---|---|---|---|
| **1.14** | **368** | **Drive overload accum** | | UINT16 | 16/32BIT | 0 | 0 | 100 | ER | FVS |

The drive overload level is displayed. An instantaneous overload of 200% of the drive rated current is allowed for 10s. The thermal image $I^2t$ adjusts the drive output current thresholds. During normal operation, the instantaneous output current value can reach 200% of the drive rated current. When the overload level par. 368 **Drive overload accum** reaches 100%, the output current threshold is reduced to 100% of the rated current, and stays at that value until the $I^2t$ integrator cycle is complete. At this point the instantaneous overload of 200% or 150% (below 3Hz) will be re-activated.

| Menu | PAR | Description | UM | Type | FB BIT | Def | Min | Max | Acc | Mod |
|---|---|---|---|---|---|---|---|---|---|---|
| **1.15** | **3260** | **Bres overload accum** | | UINT16 | 16/32BIT | 0 | 0 | 100 | ER | FVS |

The braking resistor overload limit is displayed (100% = alarm threshold).

| Menu | PAR | Description | UM | Type | FB BIT | Def | Min | Max | Acc | Mod |
|---|---|---|---|---|---|---|---|---|---|---|
| **1.16** | **1066** | **Enable state mon** | | BIT | 16BIT | 0 | 0 | 1 | R | FVS |

The drive Enable command status is displayed. Voltage must be present on terminal 7. The FR Forwardstart command is needed to start the inverter.

**1** **Enabled** drive enabled
**0** **Disabled** drive disabled

| Menu | PAR | Description | UM | Type | FB BIT | Def | Min | Max | Acc | Mod |
|---|---|---|---|---|---|---|---|---|---|---|
| **1.17** | **1068** | **Start state mon** | | BIT | 16BIT | 0 | 0 | 1 | R | FVS |

The drive **Start** command status is displayed.

| Menu | PAR | Description | UM | Type | FB BIT | Def | Min | Max | Acc | Mod |
|---|---|---|---|---|---|---|---|---|---|---|
| **1.18** | **1070** | **FastStop state mon** | | BIT | 16BIT | 0 | 0 | 1 | R | FVS |

The drive FastStop command status is displayed.

| Menu | PAR | Description | UM | Type | FB BIT | Def | Min | Max | Acc | Mod |
|---|---|---|---|---|---|---|---|---|---|---|
| **1.19** | **1200** | **Digital input X mon** | | UINT16 | 16BIT | 0 | 0 | 0 | R | FVS |

The status of the digital inputs of the expansion card is displayed. It can also be read via a serial line or fieldbus. The data are contained in a word, where each bit is 1 if voltage is supplied to the corresponding input terminal.

**1** Input enabled.
**0** Input disabled.

Example:

| | | | | | | | | | | | |
|---|---|---|---|---|---|---|---|---|---|---|---|
| 0 | 0 | 0 | 0 | 0 | 0 | 0 | 0 | 0 | 0 | **1** | **1** |
| | | | | | | | | | | | Enable |
| | | | | | | | | | | | DI 1 |

| Menu | PAR | Description | UM | Type | FB BIT | Def | Min | Max | Acc | Mod |
|---|---|---|---|---|---|---|---|---|---|---|
| **1.20** | **1400** | **Digital output X mon** | | UINT16 | | 0 | 0 | 0 | R | FVS |

The status of the digital outputs of the expansion card is displayed. It can also be read via a serial line or fieldbus. The data are contained in a word, where each bit is 1 if voltage is supplied to the corresponding input terminal.

**1** Output enabled.
**0** Output disabled.

Example:

| | | | | | | | | | | | |
|---|---|---|---|---|---|---|---|---|---|---|---|
| 0 | 0 | 0 | 0 | 0 | 0 | 0 | 0 | 0 | 0 | **1** | **1** |
| | | | | | | | | | | | DO 1 |
| | | | | | | | | | | | DO 2 |

# 2 - DRIVE INFO

This menu displays the information for identifying and configuring the drive.

| Menu | PAR | Description | UM | Type | FB BIT | Def | Min | Max | Acc | Mod |
|---|---|---|---|---|---|---|---|---|---|---|
| **2.1** | **476** | **Drive type** | | ENUM | | Basic-Sin | 1 | 0 | R | FVS |

The drive series identification code is displayed.

The drives reporting 24V in the description can be feeded by an external 24Vdc power supply. For schematics and connection diagrams please refer to Quick Start manual.

**0** Basic-Sin
**1** Advanced
**2** Basic-VGA
**3** Basic-End
**128** Basic-Sin 24V
**129** Advanced 24V
**130** Basic-VGA 24V
**131** Basic-End 24V

| Menu | PAR | Description | UM | Type | FB BIT | Def | Min | Max | Acc | Mod |
|---|---|---|---|---|---|---|---|---|---|---|
| **2.2** | **480** | **Control type** | | ENUM | | Asynchronous | 0 | 0 | R | FVS |

The control mode is displayed.

**11** Asynchronous
**12** Synchronous

| Menu | PAR | Description | UM | Type | FB BIT | Def | Min | Max | Acc | Mod |
|---|---|---|---|---|---|---|---|---|---|---|
| **2.3** | **482** | **Drive size** | | UINT16 | | 0 | 0 | 0 | RS | FVS |

The drive size identification code is displayed.

| Menu | PAR | Description | UM | Type | FB BIT | Def | Min | Max | Acc | Mod |
|---|---|---|---|---|---|---|---|---|---|---|
| **2.4** | **484** | **Drive family** | | ENUM | | No Power | 0 | 0 | RS | FVS |

The available mains voltage is displayed (e.g. 400V). The undervoltage alarm refers to this voltage value.

The condition **No power** occurs when the regulation board has just left from production and has never been configured for any power. The configuration adjustment for a given power is achieved by linking it to a power board and running a **Save parameters**.

**0** No Power
**1** 230V..480V
**2** 500V..575V
**3** 690V
**4** 230V

| Menu | PAR | Description | UM | Type | FB BIT | Def | Min | Max | Acc | Mod |
|---|---|---|---|---|---|---|---|---|---|---|
| **2.5** | **486** | **Drive region** | | ENUM | | EU | 0 | 1 | R | FVS |

Setting of the geographical area in which the drive is to be used (Europe or USA). This setting determines the factory voltage and power supply frequency values.

**0** EU (400V / 50Hz)
**1** USA (460 / 60 Hz)

| Menu | PAR | Description | UM | Type | FB BIT | Def | Min | Max | Acc | Mod |
|---|---|---|---|---|---|---|---|---|---|---|
| **2.6** | **488** | **Drive cont current** | A | FLOAT | | CALCF | 0.0 | 0.0 | RZS | FVS |

The current that the drive can deliver continuously according to size, supply voltage and programmed switching frequency is displayed.

| Menu | PAR | Description | UM | Type | FB BIT | Def | Min | Max | Acc | Mod |
|---|---|---|---|---|---|---|---|---|---|---|
| **2.7** | **490** | **Firmware ver.rel** | | UINT16 | | 0 | 0 | 0 | R | FVS |

The version number and release number of the drive firmware are displayed. On the keypad these are displayed in the version.release format. The parameter reading from the serial communication device or fieldbus returns the version in the high byte and the release in the low byte.

| Menu | PAR | Description | UM | Type | FB BIT | Def | Min | Max | Acc | Mod |
|---|---|---|---|---|---|---|---|---|---|---|
| **2.8** | **496** | **Firmware type** | | UINT16 | | 0 | 0 | 0 | R | FVS |

Identifies the version of the special firmware installed in the drive

| Menu | PAR | Description | UM | Type | FB BIT | Def | Min | Max | Acc | Mod |
|---|---|---|---|---|---|---|---|---|---|---|
| **2.9** | **504** | **Application ver.rel** | | UINT16 | | 0 | 0 | 0 | ER | FVS |

The version and release number of the application used in the drive are displayed. On the keypad these are displayed in version.release format. When the parameter is read via serial line or fieldbus the version is returned in the high byte and the release in the low byte.

| Menu | PAR | Description | UM | Type | FB BIT | Def | Min | Max | Acc | Mod |
|---|---|---|---|---|---|---|---|---|---|---|
| **2.10** | **506** | **Application type** | | UINT16 | | 0 | 0 | 0 | ER | FVS |

The type of application currently used by the drive is displayed.

**6** EFC (Creep to Floor)
**10** EPC (Direct Approach)
**11** DCP3/DCP4
**21** DS417 (CANOpen Lift CiA 417)

| Menu | PAR | Description | UM | Type | FB BIT | Def | Min | Max | Acc | Mod |
|---|---|---|---|---|---|---|---|---|---|---|
| **2.11** | **508** | **Application subver** | | UINT16 | | 0 | 0 | 0 | ER | FVS |

The sub-version of the application displayed by parameter 506 is reported.

| Menu | PAR | Description | UM | Type | FB BIT | Def | Min | Max | Acc | Mod |
|---|---|---|---|---|---|---|---|---|---|---|
| **2.12** | **510** | **Time drive power on** | h.min | UINT32 | | 0 | 0.0 | 0.0 | ER | FVS |

The total time for which the drive has been powered is displayed.

| Menu | PAR | Description | UM | Type | FB BIT | Def | Min | Max | Acc | Mod |
|---|---|---|---|---|---|---|---|---|---|---|
| **2.13** | **512** | **Time drive enable** | h.min | UINT32 | | 0 | 0.0 | 0.0 | ER | FVS |

The time for which the enable hardware contact on the drive has been connected is displayed.

| Menu | PAR | Description | UM | Type | FB BIT | Def | Min | Max | Acc | Mod |
|---|---|---|---|---|---|---|---|---|---|---|
| **2.14** | **514** | **Number power up** | | UINT16 | | 0 | 0 | 0 | ER | FVS |

The number of times the drive has been powered on is displayed.

| Menu | PAR | Description | UM | Type | FB BIT | Def | Min | Max | Acc | Mod |
|---|---|---|---|---|---|---|---|---|---|---|
| **2.15** | **516** | **Time fan on** | h.min | UINT32 | | 0 | 0.0 | 0.0 | ER | FVS |

The total time for which the drive fan has been running is displayed.

| Menu | PAR | Description | UM | Type | FB BIT | Def | Min | Max | Acc | Mod |
|---|---|---|---|---|---|---|---|---|---|---|
| **2.16** | **520** | **Product S/N** | | UINT32 | | 0 | 0 | 0 | R | FVS |

The drive serial number is displayed.

| Menu | PAR | Description | UM | Type | FB BIT | Def | Min | Max | Acc | Mod |
|---|---|---|---|---|---|---|---|---|---|---|
| **2.17** | **522** | **Regulation S/N** | | UINT32 | | 0 | 0 | 0 | R | FVS |

The drive regulation card serial number is displayed.

| Menu | PAR | Description | UM | Type | FB BIT | Def | Min | Max | Acc | Mod |
|---|---|---|---|---|---|---|---|---|---|---|
| **2.18** | **524** | **Power S/N** | | UINT32 | | 0 | 0 | 0 | R | FVS |

The drive power card serial number is displayed.

| Menu | PAR | Description | UM | Type | FB BIT | Def | Min | Max | Acc | Mod |
|---|---|---|---|---|---|---|---|---|---|---|
| **2.19** | **526** | **Power file ver.rel** | | UINT16 | | 0 | 0 | 0 | ER | FVS |

The drive power card configuration release is displayed.

| Menu | PAR | Description | UM | Type | FB BIT | Def | Min | Max | Acc | Mod |
|---|---|---|---|---|---|---|---|---|---|---|
| **2.20** | **530** | **Slot 1 card type** | | ENUM | | None | 0 | 0 | R | FVS |
| **2.21** | **532** | **Slot 2 card type** | | ENUM | | None | 0 | 0 | R | FVS |
| **2.22** | **534** | **Slot 3 card type** | | ENUM | | None | 0 | 0 | R | FVS |

The type of expansion card installed in the relative slot of the drive is displayed.

**0** None
**257** I/O 1
**1281** I/O 2
**2305** I/O 3
**3841** I/O 4
**4865** I/O 5
**5377** I/O 6
**8** Enc 1
**264** Enc 2
**520** Enc 3
**776** Enc 4
**1032** Enc 5
**4** Can/Dnet
**260** Profibus
**516** Gdnet
**255** Unknown
**15**44 Enc 4 Dbss

**Note!** See Appendix to the Quick start guide for further information on the expansion cards.
SLOT 3 indicates the presence of the CAN on the regulation card in versions ADL300-...-C

| Menu | PAR | Description | UM | Type | FB BIT | Def | Min | Max | Acc | Mod |
|---|---|---|---|---|---|---|---|---|---|---|
| **2.23** | **536** | **Slot 1 card S/N** | | UINT32 | | 0 | 0 | 0 | R | FVS |
| **2.24** | **538** | **Slot 2 card S/N** | | UINT32 | | 0 | 0 | 0 | R | FVS |
| **2.25** | **540** | **Slot 3 card S/N** | | UINT32 | | 0 | 0 | 0 | R | FVS |

The serial number of the expansion card installed in the relative slot of the drive is displayed.

| Menu | PAR | Description | UM | Type | FB BIT | Def | Min | Max | Acc | Mod |
|---|---|---|---|---|---|---|---|---|---|---|
| **2.26** | **546** | **Fw encoder ver.rel** | | UINT16 | | 0 | 0 | 0 | R | FVS |

The version and release number of the encoder firmware used in the drive are displayed. On the keypad these are displayed in version.release format. When the parameter is read via serial line or fieldbus the version is returned in the high byte and the release in the low byte.

| Menu | PAR | Description | UM | Type | FB BIT | Def | Min | Max | Acc | Mod |
|---|---|---|---|---|---|---|---|---|---|---|
| **2.27** | **548** | **Fw encoder type** | | UINT16 | | 0 | 0 | 0 | R | FVS |

The type of firmware installed in the encoder is displayed.

# 3 - STARTUP WIZARD

The startup wizard menu suggests a procedure for commissioning the drive quickly with a reduced number of settings. Advanced customization requires the use of the single parameters relating to the specific performance levels. Refer to the procedure described in chapter 9 **Commissioning via keypad** in the Quick start-up guide.

# 4 - DRIVE CONFIG

| Menu | PAR | Description | UM | Type | FB BIT | Def | Min | Max | Acc | Mod |
|---|---|---|---|---|---|---|---|---|---|---|
| **4.1** | **550** | **Save parameters** | | BIT | | 0 | 0 | 1 | RW | FVS |

Any changes to parameter values immediately affect drive operations, but are not automatically saved in the permanent memory.

The “Save Parameters” command is used to save current parameter values in the permanent memory.

Any changes that are not saved will be lost when the drive is switched off.

To save parameters follow the procedure described in STEP 9 of the **Startup wizard**.

| Menu | PAR | Description | UM | Type | FB BIT | Def | Min | Max | Acc | Mod |
|---|---|---|---|---|---|---|---|---|---|---|
| **4.2** | **552** | **Regulation mode** | | ENUM | | SSC | 0 | 3 | RWZ | FVS |

The ADL300 is capable of operating with different control modes:

**0** SSC (Sensorless Scalar Control)
**1** Flux vector OL
**2** Flux vector CL
**3** Autotune

The open loop **SSC** mode is the simplest type of asynchronous motor control, as the only parameters required are the rated voltage, current and frequency of the motor.

The open loop **SSC** control mode is factory-set and does not require any speed feedback. The natural variation in speed generated by machine load induction (slippage) can be compensated using **Slip comp** and **Slip comp filter**.

In V/f mode a single drive can be used to control several asynchronous motors, even of different sizes, connected in parallel, provided the sum of the currents of the single motors is less than the drive rated current. If using several motors connected in parallel, be sure to provide adequate thermal protection for each single motor.

Closed loop control is also possible in the **SSC** mode. It requires a speed reading by a digital encoder on the motor shaft; to enable encoder feedback, you must set parameter **2444 Slip comp mode =1**.

An optional card is necessary in order to acquire the encoder signals. The speed feedback supplied by the encoder is used to compensate motor slippage in the different load conditions, to achieve accurate control and greater precision of the actual motor speed.

With the **sensorless vector control** (**Flux vector OL**) mode, high speed and torque precision can be achieved at low motor rpm. The drive has a powerful algorithm that uses a self-tuning procedure to obtain all the electric measurements of the motor. This allows the speed and position of the motor shaft to be estimated, enabling operation similar to that of a drive with feedback, both in terms of the response in torque to load variations, and of the regularity of rotation even at very low rmp.

In the **field oriented vector mode** (**Flux vector CL**) an encoder is required for closed loop feedback. With this mode it is possible to achieve extremely high dynamic responses thanks to the regulation bandwidth, maximum torque even with the rotor blocked, speed and torque control. Numerous regulation parameters can be used to adjust the drive to each specific application, for instance adaptive gains, system inertia compensation, etc..

If the **Startup wizard** procedure is not used, self-tuning of the motor parameters is possible in the **self-tuning mode** (**Autotune**).

This procedure must be used for both self-tuning with the engine standing still and with the motor turning.

| Menu | PAR | Description | UM | Type | FB BIT | Def | Min | Max | Acc | Mod |
|---|---|---|---|---|---|---|---|---|---|---|
| **4.3** | **554** | **Access mode** | | ENUM | | Easy | 0 | 1 | RW | FVS |

**0** Easy
**1** Expert

The **Easy** mode gives access to a list of parameters that can be used for rapid drive commissioning. This type of configuration is suitable for the majority of applications.

Setting the parameter to **Expert** gives access to all the parameters in the firmware. This mode allows an extremely high level of customization to be achieved in order to exploit the potential of the ADL300 to the full.

On fw 4.0.0 the change from Easy to Expert can be protected by a dedicated password (PAR 566 **Passwd expert)**. This function is available only via keypad and not via Gefran_eXpress.

| Menu | PAR | Description | UM | Type | FB BIT | Def | Min | Max | Acc | Mod |
|---|---|---|---|---|---|---|---|---|---|---|
| **4.4** | **566** | **Passwd expert** | | UINT32 | | 0 | 0 | 99999 | RW | FVS |

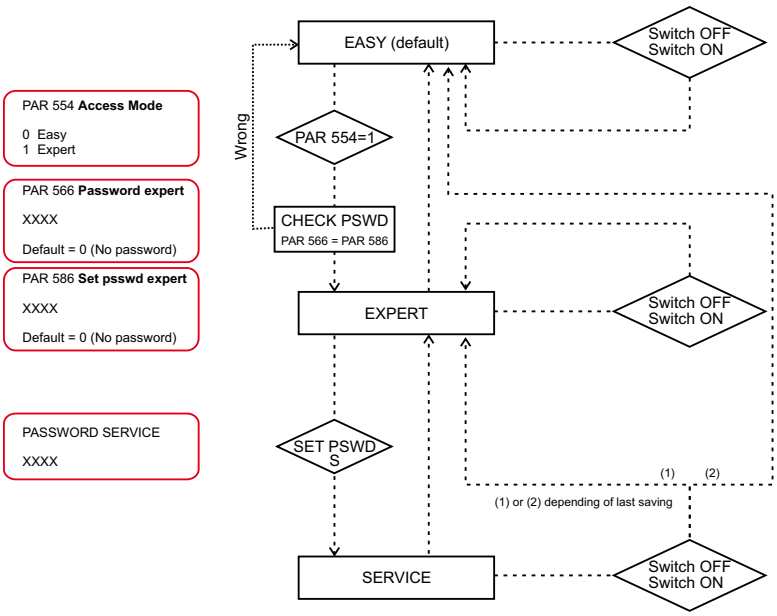


Type the password to enable parameter 554 **Access mode**.

The password must have been entered via parameter 586 **Set passwd expert.**

| Menu | PAR | Description | UM | Type | FB BIT | Def | Min | Max | Acc | Mod |
|---|---|---|---|---|---|---|---|---|---|---|
| **4.5** | | **Reserved** | | | | | | | | |

| Menu | PAR | Description | UM | Type | FB BIT | Def | Min | Max | Acc | Mod |
|---|---|---|---|---|---|---|---|---|---|---|
| **4.6** | **558** | **Application select** | | ENUM | | Application 1 | 0 | 2 | ERWZ | FVS |

Selection of which IEC 61131-3-compliant application to make operational.

**0** None
**1** Application 1
**2** Application 2

The drive is supplied already incorporating a number of applications developed in the IEC 61331-3 environment. To use these, configure the desired application, run save parameter, switch the drive off and then on again. In the default configuration the drive starts with the EFC lift application (see menu 5 - LIFT for the description of this application).

**Note!** The **Load Default** command (par. 580) does not modify this parameter

| Menu | PAR | Description | UM | Type | FB BIT | Def | Min | Max | Acc | Mod |
|---|---|---|---|---|---|---|---|---|---|---|
| **4.7** | **560** | **Mains voltage** | V | ENUM | | 400 V | SIZE | SIZE | ERWZS | FVS |

Setting of the available mains voltage value in Volts. Detection of the undervoltage alarm refers to this value.

**0** 200 V
**1** 230 V (default ADL300-...-2M)
**2** 380 V
**3** 400 V
**4** 415 V
**5** 440 V
**6** 460 V
**7** 480 V
**8** 575 V
**9** 690 V

| Menu | PAR | Description | UM | Type | FB BIT | Def | Min | Max | Acc | Mod |
|---|---|---|---|---|---|---|---|---|---|---|
| **4.8** | **448** | **Emergency UV** | V | FLOAT | | CALCF | 0.0 | CALCF | ERWZ | FVS |

This parameter enables for the undervoltage threshold to be configured during emergency conditions.

| Menu | PAR | Description | UM | Type | FB BIT | Def | Min | Max | Acc | Mod |
|---|---|---|---|---|---|---|---|---|---|---|
| **4.9** | **450** | **Undervoltage** | V | FLOAT | | CALCF | CALCF | CALCF | ERWZS | FVS |

Lets you change the Undervoltage value. Minimum and maximum default values depend on line voltage.

| Menu | PAR | Description | UM | Type | FB BIT | Def | Min | Max | Acc | Mod |
|---|---|---|---|---|---|---|---|---|---|---|
| **4.10** | **454** | **Chopper ON** | V | FLOAT | | CALCF | CALCF | CALCF | ERWZS | FVS |

Corresponding to the threshold of activation of the braking resistor. It is so possible to increase this value just below the **Overvoltage** threshold level (ADL300-...-4 = 802 Vdc, ADL300-...-2T = 396 Vdc, ADL300-...-2M = 396 Vdc).

Parameter's range are defined thru IPA 560 **Mains voltage** setting.

***Note !*** If **Mains voltage** is set at the maximum possible value, the activation threshold of the braking resistor can only assume the max value and can not be changed.

| Menu | PAR | Description | UM | Type | FB BIT | Def | Min | Max | Acc | Mod |
|---|---|---|---|---|---|---|---|---|---|---|
| **4.11** | **570** | **Password** | | UINT32 | | 0 | 0 | 99999 | ERW | FVS |

You can enter a **password** to protect the parameters from unauthorized tampering: the password can consist of a combination of a maximum of any 5 figures that can be selected by the user. All parameters are locked, except this one and **Save parameters**.

Entering the password, press the E key, then enter the password and press the E key again to enable it (a password enabled message (**Enabled**) is displayed).

So that the password remains valid even after switching the unit off and then switching it back on, save it using the **Save parameters** command.

When the password is enabled any attempts to modify a parameter are blocked and the **Password enabled** message is displayed.

To disable the password, enter the **Password** parameter (**570**) in the **DRIVE CONFIG menu**.

Check that the password is enabled (**Enabled**), press E and enter the combination of figures that make up the password.

Press E again. A message is displayed telling you the password is no longer enabled (**Disabled**).

To make sure the password continues to be disabled even after switching the unit off and then switching it back on, save this configuration using the **Save parameters** command.

When an incorrect password is entered, the Password wrong message is displayed.

| Menu | PAR | Description | UM | Type | FB BIT | Def | Min | Max | Acc | Mod |
|---|---|---|---|---|---|---|---|---|---|---|
| **4.12** | **586** | **Set passwd expert** | | UINT32 | | 0 | 0 | 99999 | ERW | FVS |

Enables the password to protect change of the setting of parameter 554 **Access mode** from **Easy** to **Expert**. A value other than 0 must be entered. Entering 0 disables the password.

You have to enter **Expert** mode to access parameter 586 **Set passwd expert**.

The password value must be entered twice to be accepted.

After the password is set, parameter 554 **Access mode** remains in **Expert** mode; to enable the protection, enter the password in parameter 566 **Passwd expert**.

Now parameter 554 **Access mode** will go to **Easy** mode. At every power-on, the drive will start in Easy mode with the protection enabled.

| Menu | PAR | Description | UM | Type | FB BIT | Def | Min | Max | Acc | Mod |
|---|---|---|---|---|---|---|---|---|---|---|
| **4.13** | **572** | **Application key** | | UINT32 | | 0 | 0 | 4294967295 | ERW | FVS |

This parameter can be used to enter the key for enabling the PLC application.

You may need to enter a key to definitively enable some PLC applications. Please contact Gefran for details about which PLC applications require the key.

If executing an application that envisages a key verification and the key is incorrect, enabling is forced for 200 hours (time drive enabled).

In this phase a message is displayed informing you that the period of forced enabling time is about to expire.

At the first power-on after the 200 hours an alarm is generated and the application does not start.

Please contact Gefran for the numerical value of the key.

| Menu | PAR | Description | UM | Type | FB BIT | Def | Min | Max | Acc | Mod |
|---|---|---|---|---|---|---|---|---|---|---|
| **4.14** | **574** | **Startup display** | | INT16 | | -1 | -1 | 20000 | ERW | FVS |

It is possible to set the parameter that will automatically be displayed when the drive is switched on.

If set to -1 the main menu is automatically displayed when the drive is turned on.

If set to 0 the display page is automatically displayed when the drive is turned on.

| Menu | PAR | Description | UM | Type | FB BIT | Def | Min | Max | Acc | Mod |
|---|---|---|---|---|---|---|---|---|---|---|
| **4.15** | **576** | **Display backlight** | | BIT | | 0 | 0 | 1 | ERW | FVS |

Enabling of the backlight on the drive display.

If set to 0 the display backlight will go off when the drive has been on for three minutes.

If set to 1 the backlight will stay on for as long as the drive is powered.

| Menu | PAR | Description | UM | Type | FB BIT | Def | Min | Max | Acc | Mod |
|---|---|---|---|---|---|---|---|---|---|---|
| **4.16** | **578** | **Language select** | | ENUM | | English | 0 | 4 | RWZ | FVS |

Setting of the drive programming language.

**0** English
**1** Italian
**2** French
**3** German
**4** Spanish
**8** Turkish

**Note!** The **Load Default** command (par. 580) does not modify this parameter.

| Menu | PAR | Description | UM | Type | FB BIT | Def | Min | Max | Acc | Mod |
|---|---|---|---|---|---|---|---|---|---|---|
| **4.17** | **580** | **Load default** | | BIT | | 0 | 0 | 1 | RWZ | FVS |

Transfers the standard factory settings to the drive memory (“Def” column in the parameters table).

| Menu | PAR | Description | UM | Type | FB BIT | Def | Min | Max | Acc | Mod |
|---|---|---|---|---|---|---|---|---|---|---|
| **4.18** | **590** | **Save par to keypad** | | BIT | | 0 | 0 | 1 | RW | FVS |

Transfers the parameters currently stored in the drive and saves them in the keypad memory (See ADL300 Quick Start manual, chapter 8.3.13).

| Menu | PAR | Description | UM | Type | FB BIT | Def | Min | Max | Acc | Mod |
|---|---|---|---|---|---|---|---|---|---|---|
| **4.19** | **592** | **Load par from keypad** | | BIT | | 0 | 0 | 1 | RWZ | FVS |

Transfers the parameters from the keypad memory to the drive (See ADL300 Quick Start manual, chapter 8.3.13).

| Menu | PAR | Description | UM | Type | FB BIT | Def | Min | Max | Acc | Mod |
|---|---|---|---|---|---|---|---|---|---|---|
| **4.20** | **594** | **Keypad memory select** | | UINT16 | | 1 | 1 | 5 | ERW | FVS |

Selection of the area of the keypad memory to which to transfer and save the parameters stored in the drive.

| Menu | PAR | Description | UM | Type | FB BIT | Def | Min | Max | Acc | Mod |
|---|---|---|---|---|---|---|---|---|---|---|
| **4.21** | **596** | **Save to SD card** | | BIT | | 0 | 0 | 1 | RW | FVS |

Transfers the drive parameters to the SD memory card (See chapter 8.3.14 of the Quick start-up guide).

| Menu | PAR | Description | UM | Type | FB BIT | Def | Min | Max | Acc | Mod |
|---|---|---|---|---|---|---|---|---|---|---|
| **4.22** | **598** | **Load from SD card** | | BIT | | 0 | 0 | 1 | RWZ | FVS |

Transfers the parameters from the SD memory card to the drive (See chapter 8.3.14 of the Quick start-up guide).

| Menu | PAR | Description | UM | Type | FB BIT | Def | Min | Max | Acc | Mod |
|---|---|---|---|---|---|---|---|---|---|---|
| **4.23** | **6100** | **Load synch control** | | BIT | | 0 | 0 | 1 | ERW | FVS |

Select the synchronous motor control mode. The drive is reset and restarts in the new control mode.

To perform this operation via keypad, see chapters 8.2.9 and 8.2.15 of the ADL 300 Quick Start Guide.

**Note!** Important: the default parameters including the LIFT application are reloaded.

This can only be done with the drive disabled.

Attention

**Multi speed configuration table:**

**Through the combination of "MtlSpd S0" (Digital input 4), "MtlSpd S1" (Digital input 5) and "MtlSpd S2" (Digital input 6) commands, is possible to select Multi speed desired, according to next table:**

| MtlSpd S2 | MtlSpd S1 | MtlSpd S0 | ACTIVE SPEED |
|---|---|---|---|
| 0 | 0 | 0 | Multispeed 0, PAR 11020 |
| 0 | 0 | 1 | Multispeed 1, PAR 11022 |
| 0 | 1 | 0 | Multispeed 2, PAR 11024 |
| 0 | 1 | 1 | Multispeed 3, PAR 11026 |
| 1 | 0 | 0 | Multispeed 4, PAR 11028 |
| 1 | 0 | 1 | Multispeed 5, PAR 11030 |
| 1 | 1 | 0 | Multispeed 6, PAR 11032 |
| 1 | 1 | 1 | Multispeed 7, PAR 11034 |

## 5.1 – SPEED

| Menu | PAR | Description | UM | Type | FB BIT | Def | Min | Max | Acc | Mod |
|---|---|---|---|---|---|---|---|---|---|---|
| **5.1.1** | **11002** | **Travel units sel** | Hz | ENUM | | 0 | 0 | 2 | RW | FVS |

Selection of the unit of measure for speed references.

**0** Hz (output frequency)
**1** m/s (cabin speed and depends on the mechanical constant)
**2** Rpm (speed of the motor shaft)
**3** USCS (US units: fpm, ft/s², ft/s³)

When the unit of measure is modified the conversion constants are re-calculated, the units of measure are changed in the parameter list and the multispeed values are converted into the new unit of measure (the result may contain approximations due to the conversion calculations).

A variable representing the speed of the cabin in m/s (fpm) is always available (PAR 12210).

There are fixed units of measure for the acceleration and deceleration parameters m/s² (ft/s²), and for jerks m/s³ (ft/s³).

| Menu | PAR | Description | UM | Type | FB BIT | Def | Min | Max | Acc | Mod |
|---|---|---|---|---|---|---|---|---|---|---|
| **5.1.2** | **11020** | **Multi speed 0** | Hz | FLOAT | | 5.00 | -10000 | 10000 | RW | FVS |

Setting of the multispeed 0 value. Can be selected via digital input, fieldbus, etc.

The selected value is the reference for the S-shaped lift ramp.

This setting is taken as the default low speed value.

| Menu | PAR | Description | UM | Type | FB BIT | Def | Min | Max | Acc | Mod |
|---|---|---|---|---|---|---|---|---|---|---|
| **5.1.3** | **11022** | **Multi speed 1** | Hz | FLOAT | | 50.00 | -10000 | 10000 | RW | FVS |

Setting of the multispeed 1 value. Can be selected via digital input, fieldbus, etc.

The selected value is the reference for the S-shaped lift ramp.

This setting is taken as the default high speed value.

| Menu | PAR | Description | UM | Type | FB BIT | Def | Min | Max | Acc | Mod |
|---|---|---|---|---|---|---|---|---|---|---|
| **5.1.4** | **11024** | **Multi speed 2** | Hz | FLOAT | | 20.00 | -10000 | 10000 | RW | FVS |

Setting of the multispeed 2 value. Can be selected via digital input, fieldbus, etc.

The selected value is the reference for the S-shaped lift ramp.

This setting is taken as the default maintenance speed value.

| Menu | PAR | Description | UM | Type | FB BIT | Def | Min | Max | Acc | Mod |
|---|---|---|---|---|---|---|---|---|---|---|
| **5.1.5** | **11026** | **Multi speed 3** | Hz | FLOAT | | 0.00 | -10000 | 10000 | RW | FVS |

Setting of the multispeed 3 value. Can be selected via digital input, fieldbus, etc.

The selected value is the reference for the S-shaped lift ramp.

| Menu | PAR | Description | UM | Type | FB BIT | Def | Min | Max | Acc | Mod |
|---|---|---|---|---|---|---|---|---|---|---|
| **5.1.6** | **11028** | **Multi speed 4** | Hz | FLOAT | | 0.00 | -10000 | 10000 | RW | FVS |

Setting of the multispeed 4 value. Can be selected via digital input, fieldbus, etc.
The selected value is the reference for the S-shaped lift ramp.

| Menu | PAR | Description | UM | Type | FB BIT | Def | Min | Max | Acc | Mod |
|---|---|---|---|---|---|---|---|---|---|---|
| **5.1.7** | **11030** | **Multi speed 5** | Hz | FLOAT | | 0.00 | -10000 | 10000 | RW | FVS |

Setting of the multispeed 5 value. Can be selected via digital input, fieldbus, etc.
The selected value is the reference for the S-shaped lift ramp.

| Menu | PAR | Description | UM | Type | FB BIT | Def | Min | Max | Acc | Mod |
|---|---|---|---|---|---|---|---|---|---|---|
| **5.1.8** | **11032** | **Multi speed 6** | Hz | FLOAT | | 0.00 | -10000 | 10000 | RW | FVS |

Setting of the multispeed 6 value. Can be selected via digital input, fieldbus, etc.
The selected value is the reference for the S-shaped lift ramp.

| Menu | PAR | Description | UM | Type | FB BIT | Def | Min | Max | Acc | Mod |
|---|---|---|---|---|---|---|---|---|---|---|
| **5.1.9** | **11034** | **Multi speed 7** | Hz | FLOAT | | 0.00 | -10000 | 10000 | RW | FVS |

Setting of the multispeed 7 value. Can be selected via digital input, fieldbus, etc.
The selected value is the reference for the S-shaped lift ramp.

| Menu | PAR | Description | UM | Type | FB BIT | Def | Min | Max | Acc | Mod |
|---|---|---|---|---|---|---|---|---|---|---|
| **5.1.10** | **12010** | **Actual multi spd sel** | | ENUM | | | | | R | FVS |

The currently selected speed is displayed.

**0** Multi speed 0
**1** Multi speed 1
**2** Multi speed 2
**3** Multi speed 3
**4** Multi speed 4
**5** Multi speed 5
**6** Multi speed 6
**7** Multi speed 7
**8** Null

| Menu | PAR | Description | UM | Type | FB BIT | Def | Min | Max | Acc | Mod |
|---|---|---|---|---|---|---|---|---|---|---|
| **5.1.11** | **12210** | **Actual speed ref** | m/s | FLOAT | | | | | R | FVS |

The speed of the cabin is displayed in m/s.

## 5.2 – RAMPS

The lift application envisages an S-shaped ramp function with the possibility of setting 4 independent jerks and linear acceleration and deceleration factors, as in the standard profile illustrated in the figure below.

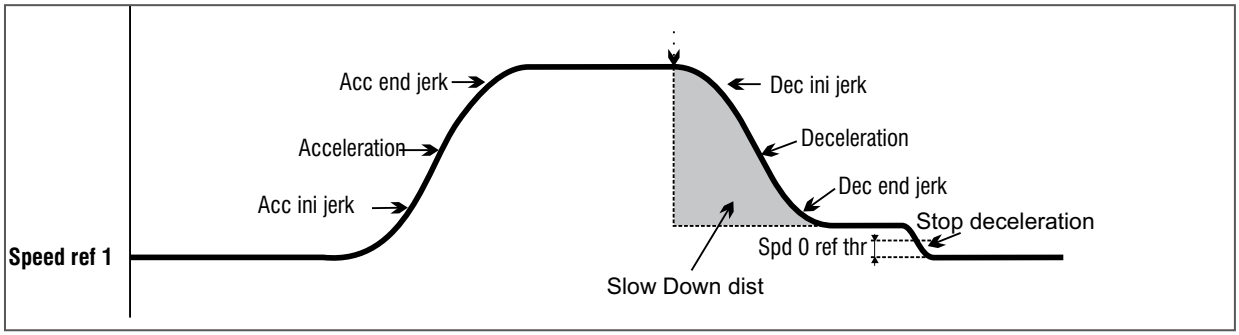


The Acc ini Jerk, Acceleration and Acc end jerk values used to execute the acceleration ramp are calculated by multiplying the corresponding parameters by the acceleration ramp factor (Percent acc factor), while the Dec ini jerk, Deceleration and Dec end jerk values used to execute the deceleration ramp are calculated by multiplying the corresponding parameters by the deceleration ramp factor (**Percent dec factor**, PAR 11056).

When the **Start** command is removed, the reference speed is zero regardless of the reference selected in the multispeeds. In this final part of the profile the jerk deceleration values are used directly (not multiplied by **Percent dec factor**, PAR 11056) with the **Stop deceleration** parameter as the linear deceleration. The factors for the final section of the profile are also used in case of a Stop lift emergency condition.

| Menu | PAR | Description | UM | Type | FB BIT | Def | Min | Max | Acc | Mod |
|---|---|---|---|---|---|---|---|---|---|---|
| **5.2.1** | **11040** | **Acc ini Jerk** | $m/s^3$ | FLOAT | | 0.50 | 0.01 | 20 | RW | FVS |

Setting of the jerk value for the first part of the acceleration.

| Menu | PAR | Description | UM | Type | FB BIT | Def | Min | Max | Acc | Mod |
|---|---|---|---|---|---|---|---|---|---|---|
| **5.2.2** | **11042** | **Acceleration** | $m/s^2$ | FLOAT | | 0.60 | 0.01 | 10 | RW | FVS |

Setting of the maximum acceleration value.

| Menu | PAR | Description | UM | Type | FB BIT | Def | Min | Max | Acc | Mod |
|---|---|---|---|---|---|---|---|---|---|---|
| **5.2.3** | **11044** | **Acc end jerk** | $m/s^3$ | FLOAT | | 1.40 | 0.01 | 20 | RW | FVS |

Setting of the jerk value for the last part of the acceleration.

| Menu | PAR | Description | UM | Type | FB BIT | Def | Min | Max | Acc | Mod |
|---|---|---|---|---|---|---|---|---|---|---|
| **5.2.4** | **11046** | **Dec ini jerk** | $m/s^3$ | FLOAT | | 1.40 | 0.01 | 20 | RW | FVS |

Setting of the jerk value for the first part of the deceleration.

| Menu | PAR | Description | UM | Type | FB BIT | Def | Min | Max | Acc | Mod |
|---|---|---|---|---|---|---|---|---|---|---|
| **5.2.5** | **11048** | **Deceleration** | $m/s^2$ | FLOAT | | 0.60 | 0.01 | 10 | RW | FVS |

Setting of the maximum deceleration value.

| Menu | PAR | Description | UM | Type | FB BIT | Def | Min | Max | Acc | Mod |
|---|---|---|---|---|---|---|---|---|---|---|
| **5.2.6** | **11050** | **Dec end jerk** | $m/s^3$ | FLOAT | | 0.50 | 0.01 | 20 | RW | FVS |

Setting of the jerk value for the last part of the deceleration.

| Menu | PAR | Description | UM | Type | FB BIT | Def | Min | Max | Acc | Mod |
|---|---|---|---|---|---|---|---|---|---|---|
| **5.2.7** | **11052** | **Stop deceleration** | $m/s^2$ | FLOAT | | 0.70 | 0.01 | 10 | RW | FVS |

Setting of the maximum deceleration value used when the start command is removed.

| Menu | PAR | Description | UM | Type | FB BIT | Def | Min | Max | Acc | Mod |
|---|---|---|---|---|---|---|---|---|---|---|
| **5.2.8** | **11054** | **Percent acc factor** | Perc | FLOAT | | 100.00 | 10 | 10000 | RW | FVS |

Setting of the acceleration factor multiplier.

If set to 100 the ramp uses the factors entered in the parameters.

If set to a value of less than 100 the lift will tend to accelerate over a longer distance.
If set to a value of more than 100 the lift will tend to accelerate over a shorter distance.

| Menu | PAR | Description | UM | Type | FB BIT | Def | Min | Max | Acc | Mod |
|---|---|---|---|---|---|---|---|---|---|---|
| **5.2.9** | **11056** | **Percent dec factor** | Perc | FLOAT | | 100.00 | 10 | 10000 | RW | FVS |

Setting of the deceleration factor multiplier.
If set to 100 the ramp uses the factors entered in the parameters.
If set to a value of less than 100 the lift will tend to decelerate over a longer distance.
If set to a value of more than 100 the lift will tend to decelerate over a shorter distance.

## 5.3 – LIFT SEQUENCES

This menu shows the parameters used to manage and define the travel of the lift depending on the status of the inputs and alarms. The structure of the lift sequences is summarised below.

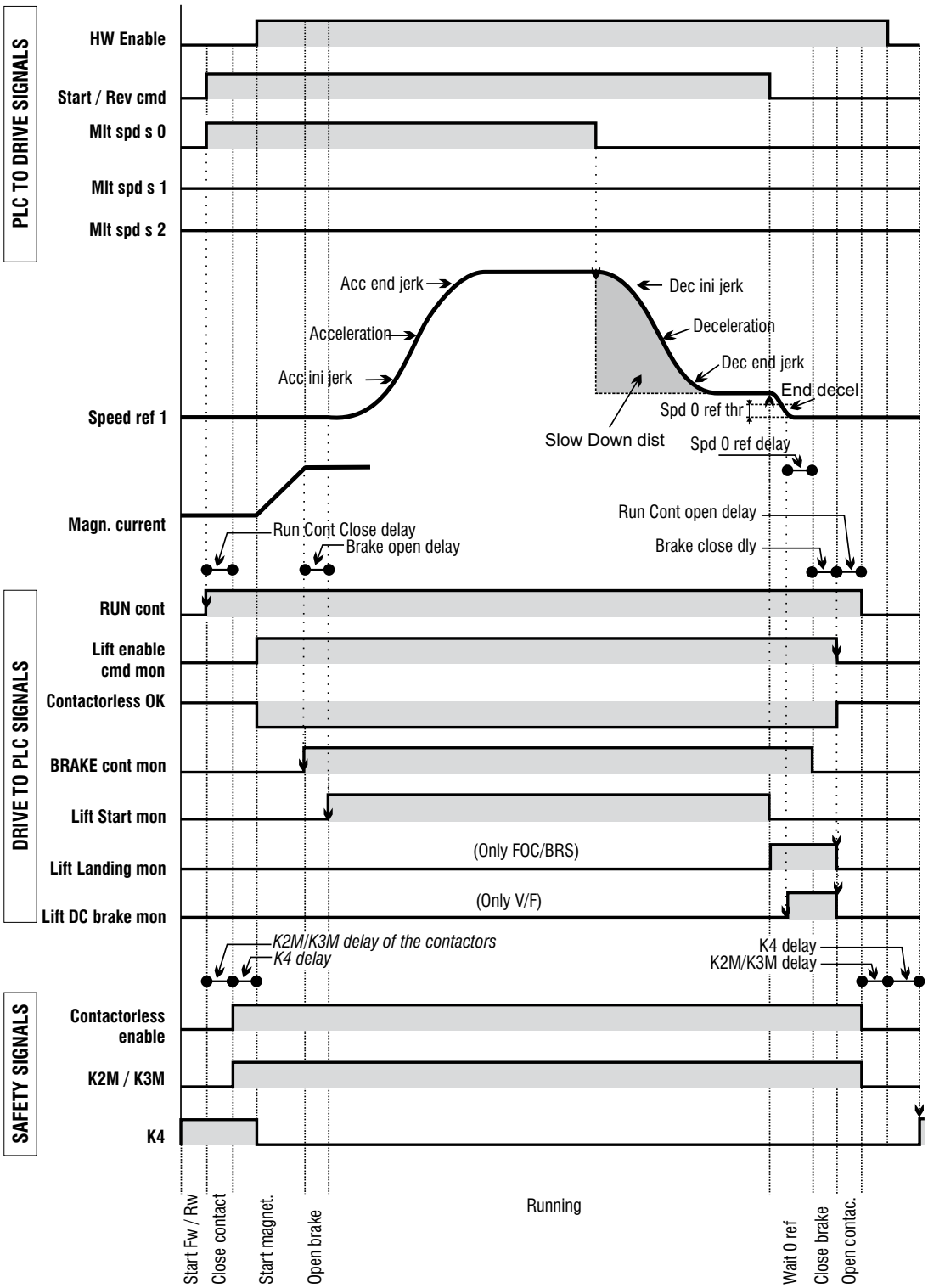


**Starting sequence:**

1 Reading of the enable hardware input and checking for alarms (enabling is aborted in case of an alarm)

2 Detection of the **Enable** and **Start** commands as set in the **Sequence start mode** parameter

3 When the **Start forward/reverse** command is received, a command is sent to close the contactors, depending on the direction of travel

4 When the time set in **Cont close delay** has elapsed the internal **Enable** lift signal is activated

5 The system waits for the magnetisation signal from the drive (**Drive ready**)

6 At the end of magnetisation the open brake signal is activated

7 The system waits for the brake to be opened (**Brake open delay**)
8 When the delay before opening the brake has elapsed the **Start** lift command is sent and movement is enabled.

**Sequence of movement:**

1 The motor is started and moves slowly at the speed set in Smooth start speed for the time indicated in **Smooth start delay**
2 At the end of **Smooth start delay**, movements are managed by the multispeeds and S-shaped ramp
3 When the set speed is exceeded, the **Brake 2 mon** output signal can be used to check that the brake has actually been opened
4 The EFC function with space control can be used to change to a slower speed
5 When the **Start forward/reverse** signal is lowered the signal indicating arrival at the floor is enabled and the start lift signal is disabled
6 The start command can be sent again until the drive reaches zero speed: the operating conditions are restored.

**Stopping sequence:**

1 When zero speed is reached the DC stop command is enabled (**SSC** control)
2 The application waits the time needed to reach zero speed and sends the command to close brakes 1 and 2
3 It waits the time necessary for the brakes to close (Brake close delay) and, if the current is to be reduced with a ramp, it waits for the current limit to reach zero. The internal Enable lift, arrival zone and DC brake signals are then lowered.
4 The application waits the time set in **Contactor open delay** and checks that the current supplied is zero, before sending a command to open the contactors.

**It** is essential to make sure that whenever a drive alarm condition is generated or the drive is disabled, the drive is stopped and a command is sent to open the contactors.

| Menu | PAR | Description | UM | Type | FB BIT | Def | Min | Max | Acc | Mod |
|---|---|---|---|---|---|---|---|---|---|---|
| **5.3.1** | **11060** | **Sequence start mode** | | ENUM | | 0 | 0 | 2 | RW | FVS |

Setting of the procedure to start the contactor command sequence.

**0** Start forward/reverse
**1** Enable
**2** Multispeed != 0

If set to **0** the contactor sequences can be enabled without the Enable command (Enable is only required for motor operation). The Enable signal can be sent by an auxiliary contact of the output contactors.

If set to **1** the contactor sequences can only be enabled if the Enable command is active.

If set to **2** the contactor sequences can be enabled using the multispeed values. Multispeed values other than 0 cause the sequence to start. The start command must also be enabled.

| Menu | PAR | Description | UM | Type | FB BIT | Def | Min | Max | Acc | Mod |
|---|---|---|---|---|---|---|---|---|---|---|
| **5.3.2** | **11062** | **Cont close delay** | ms | INT32 | | 200.00 | 0 | 10000 | RW | FVS |

Setting of the delay time for closing the contactor.

| Menu | PAR | Description | UM | Type | FB BIT | Def | Min | Max | Acc | Mod |
|---|---|---|---|---|---|---|---|---|---|---|
| **5.3.3** | **11064** | **Brake open delay** | ms | INT32 | | 200 | 0 | 10000 | RW | FVS |

Setting of the brake opening delay time.

| Menu | PAR | Description | UM | Type | FB BIT | Def | Min | Max | Acc | Mod |
|---|---|---|---|---|---|---|---|---|---|---|
| **5.3.4** | **11066** | **Smooth start delay** | ms | INT32 | | 0 | 0 | 10000 | RW | FVS |

Setting of the time for which the **Smooth start speed** speed is enabled. If this parameter is set to zero, the S-shaped profile is executed directly at the start, and the soft start function is excluded.

| Menu | PAR | Description | UM | Type | FB BIT | Def | Min | Max | Acc | Mod |
|---|---|---|---|---|---|---|---|---|---|---|
| **5.3.5** | **11068** | **Brake close delay** | ms | INT32 | | 500.00 | 0 | 10000 | RW | FVS |

Setting of the brake closing delay time.

| Menu | PAR | Description | UM | Type | FB BIT | Def | Min | Max | Acc | Mod |
|---|---|---|---|---|---|---|---|---|---|---|
| **5.3.6** | **11070** | **Current down delay** | ms | INT32 | | 200 | 0 | 10000 | RW | FVS |

Setting of the time necessary to lower the torque from the limit value enabled during travel to 0. It defines the inclination of the down ramp in the “Current down ramp” function. The purpose of this function is to prevent the immediate removal of motor torque when the brake is closed, which would cause mechanical strain in the cabin.

To avoid this phenomenon when the brake is closed the current limits are brought to the current value in use and then lowered on the ramp.

To enable the function the **Current down delay** parameter must be set to a value other than zero.

This is only possible when **Torque curr lim** sel has a value other than “OFF”, otherwise **Current down delay** is forced to zero.

| Menu | PAR | Description | UM | Type | FB BIT | Def | Min | Max | Acc | Mod |
|---|---|---|---|---|---|---|---|---|---|---|
| **5.3.7** | **11072** | **Contactor open delay** | ms | INT32 | | 200.00 | 0 | 10000 | RW | FVS |

Setting of the contactor opening delay time.

| Menu | PAR | Description | UM | Type | FB BIT | Def | Min | Max | Acc | Mod |
|---|---|---|---|---|---|---|---|---|---|---|
| **5.3.8** | **11078** | **Speed 0 threshold** | rpm | INT16 | | 30.00 | | | RW | FVS |

Setting of the zero speed threshold, below which the zero speed signal is activated.

| Menu | PAR | Description | UM | Type | FB BIT | Def | Min | Max | Acc | Mod |
|---|---|---|---|---|---|---|---|---|---|---|
| **5.3.9** | **11080** | **Speed 0 delay** | ms | UINT16 | | 400.00 | 0 | 10000 | RW | FVS |

Setting of the zero speed delay. After the zero speed signal and after the time set in this parameter the zero speed signal is activated. These parameters are used to know the cabin stop.

| Menu | PAR | Description | UM | Type | FB BIT | Def | Min | Max | Acc | Mod |
|---|---|---|---|---|---|---|---|---|---|---|
| **5.3.10** | **11082** | **Smooth start speed** | Hz | FLOAT | | 0.00 | 0.00 | 10000.0 | RW | FVS |

Setting of the speed in the smooth start phase.

| Menu | PAR | Description | UM | Type | FB BIT | Def | Min | Max | Acc | Mod |
|---|---|---|---|---|---|---|---|---|---|---|
| **5.3.11** | **11084** | **Smooth start mode** | | ENUM | | 2 | 1 | 2 | RW | FVS |

Setting of the soft start mode.

**1** Speed consant
**2** Jerk variable

If set to 1 the soft speed is automatically selected after the start command regardless of the selected multispeed. The duration of the smooth speed depends on the **Smooth start delay** parameter: if this parameter is set to zero the selected multispeed is used and not the soft speed. This setting is used in systems with a reducer, as it helps to overcome initial friction before starting with the profile.

If set to 2 an even slower starting mode is set, which uses the start jerk of the variable acceleration in the smooth start phase. Depending on the values set in **Smooth start speed** and **Smooth start delay** the jerk value is calculated at the end of the soft start phase with a linear ramp that changes this jerk from 0 to the calculated value.

The use of a variable value jerk obtains a variable start acceleration that follows a parabolic trajectory, enabling extremely reduced variations in initial speed. This setting is mainly used in systems with gearless motors.

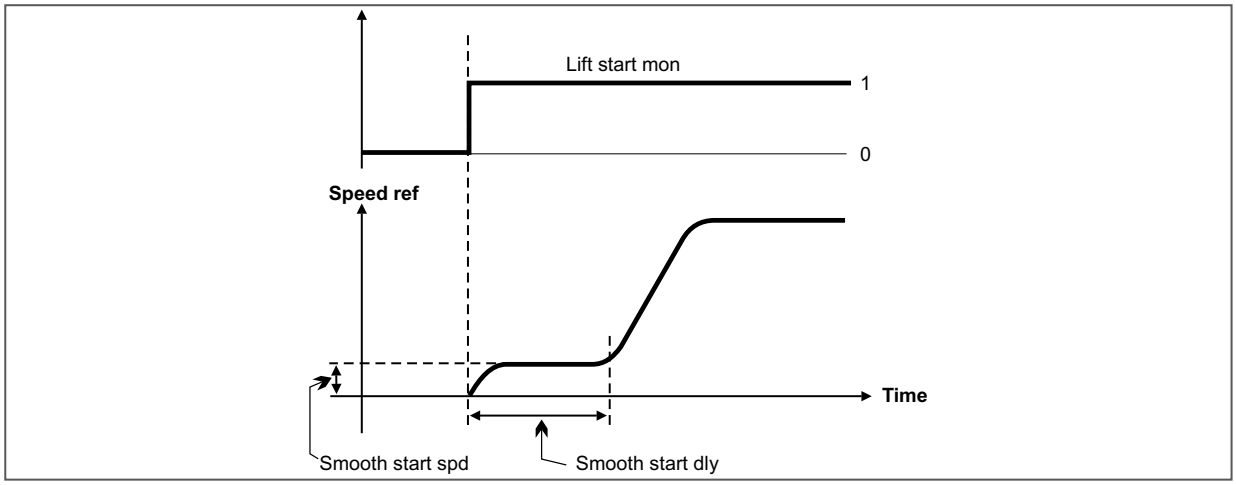


| Menu | PAR | Description | UM | Type | FB BIT | Def | Min | Max | Acc | Mod |
|---|---|---|---|---|---|---|---|---|---|---|
| **5.3.12** | **11086** | **Door open speed** | m/s | FLOAT | | 0.00 | | | RW | FVS |

Setting of the door opening speed.

Source to enable brake release through the digital input. In standard sequence brake release is controlled by the drive and therefore this parameter is set to ONE. In case that brake release should be conditioned by some external control (e.g. PLC), set this parameter to digital input controlled by PLC.

Internal sequence for brake release will wait until this input is asserted.

During run brake will be closed whenever this input becomes not asserted.

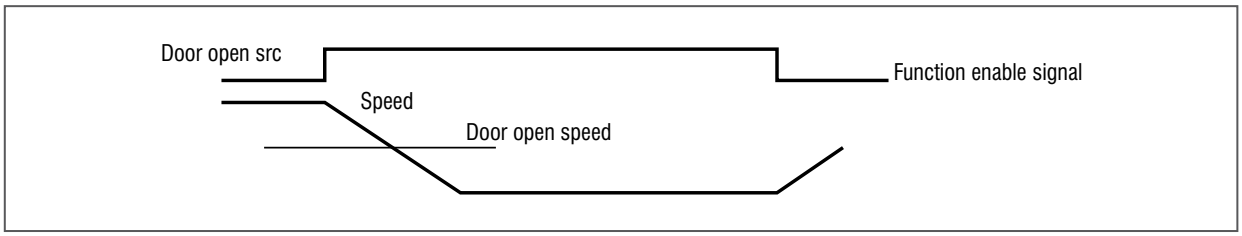


| Menu | PAR | Description | UM | Type | FB BIT | Def | Min | Max | Acc | Mod |
|---|---|---|---|---|---|---|---|---|---|---|
| **5.3.13** | **11088** | **Contactorless Enable** | | | BIT | 0 | 0 | 1 | RW | FVS |

This should be configured if the contactorless mode is desired. By enabling this parameter, the fast enable command is brought to digital Input 7 and the drive indicates the contactorless operation mode to the controller through digital output 4 (see Figure 7.3.2.8-A in the ADL300 QS installation manual).

| Menu | PAR | Description | UM | Type | FB BIT | Def | Min | Max | Acc | Mod |
|---|---|---|---|---|---|---|---|---|---|---|
| **5.3.14** | **11826** | **Inspection Behaviour** | | Enum | | None | 0 | 2 | R/Z | FVS |

**0** None
**1** Fast Stop
**2** Immediate

Manages the stop ramp in maintenance/inspection mode. If enabled, the function allows greater deceleration compared to nominal deceleration.

Three modes are available:

**None**: function disabled (default). The car stops with the normal ramps inserted.

**Fast Stop:** the 200 ms stop function is enabled if the set maintenance speed (PAR 11024 **Multi speed 2** or PAR 11828 **Inspection speed**) is below 0.63 m/s. If the set speed is higher it is automatically limited to 0.63 m/s.

**Immediate**: car stops immediately with brake close. The car stops immediately (with no ramp) when the button on the maintenance button panel is released.

| Menu | PAR | Description | UM | Type | FB BIT | Def | Min | Max | Acc | Mod |
|---|---|---|---|---|---|---|---|---|---|---|
| **5.3.15** | **11828** | **Inspection speed** | | Enum | | 2 | | | R/Z | FVS |

**0** Multi speed 0
**1** Multi speed 1
**2** Multi speed 2
**3** Multi speed 3
**4** Multi speed 4
**5** Multi speed 5
**6** Multi speed 6
**7** Multi speed 7
**8** Null

Maintenance speed.

| Menu | PAR | Description | UM | Type | FB BIT | Def | Min | Max | Acc | Mod |
|---|---|---|---|---|---|---|---|---|---|---|
| **5.3.16** | **12014** | **Trip number** | | INT32 | | 0 | | | R | FVS |

The lift journey counter is displayed. The counter increases each time the Start lift signal is activated.

| Menu | PAR | Description | UM | Type | FB BIT | Def | Min | Max | Acc | Mod |
|---|---|---|---|---|---|---|---|---|---|---|
| **5.3.17** | **12016** | **Sequence state** | | UINT16 | | 0 | | | R | FVS |

The lift sequence status is displayed.

| Ref | PAR 12016 description | Note |
|---|---|---|
| 0 | Idle | Not active |
| 1 | Cont close | Close Contact on Sequence lift diagram (*) |
| 2 | Drive ready | |

| | | |
|---|---|---|
| 3 | Brake open | Open Brake on Sequence lift diagram (*) |
| 4 | Smooth start | Refer to diagram on parameter 11084 |
| 5 | Multispeed | “Mlt spd s0/s1/s2” on Sequence lift diagram (*) |
| 6 | Waiting 0 spd | “Wait 0 ref” on Sequence lift diagram (*) |
| 7 | Zero speed | “Spd 0 ref” on Sequence lift diagram (*) |
| 8 | Brake close | "Close Brake" on Sequence lift diagram (*) |
| 9 | Cont open | “Open contact” on Sequence lift diagram (*) |
| 10 | Not drive ok | |

(*) the diagram is at the top of menu 5.3

## 5.4 – MECHANICAL DATA

The parameters described in this menu are used to define the mechanical and physical features of the system.

**Mechanical constants**

The mechanical constant defines the ratio between motor rpm and distance travelled by the cabin.

The **ConstMech** can be calculated in two ways, depending on which conversion method is used.

**- Directly**: **Mechanical constant** = System speed/(Full scale speed/60)

**- Mechanical data**: **Mechanical constant** = (π *Pulley diameter)/Reduction gear ratio

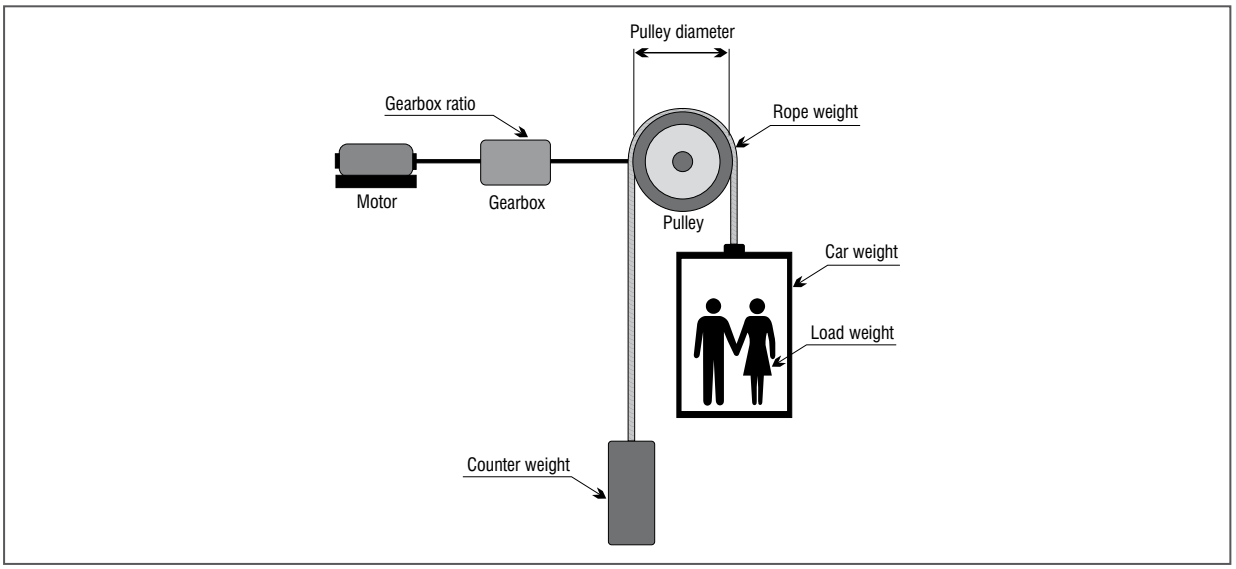


The mechanical constant is calculated when the drive is turned on and re-calculated each time one of the parameters used to determine this value is modified (**Mechanical calc mode, Full scale speed, Contract speed, Pulley diameter, Gearbox ratio**).

The method used to calculate the mechanical constant can be selected regardless of the control mode (**SSC**, **Flux vector OL**, **Flux vector CL**, **Synchronous**) or the unit of measure to be used.

**Weights and inertia**

Entering the mechanical features of the system makes it possible to calculate the total inertia applied to the motor.

After modifying these parameters the calculated inertia value is automatically saved in the "**Inertia comp**" parameter to enable correct inertia compensation.

The value of the inertia that can be entered in the "**Inertia**" parameter in the "16 - SPEED REG GAINS" menu is displayed to calculate the speed loop parameters more accurately. This operation is performed automatically when PAR 11162 Calc spd reg gain is enabled.

| Menu | PAR | Description | UM | Type | FB BIT | Def | Min | Max | Acc | Mod |
|---|---|---|---|---|---|---|---|---|---|---|
| **5.4.1** | **11006** | **Contract speed** | m/s | FLOAT | | 0.5 | 0 | 10 | RW | FVS |

Represents the speed of the system. It is also used to calculate the mechanical constant. The cabin speed in m/s is associated with the full scale speed (par. 628) to obtain the conversion factor (m/rpm).

| Menu | PAR | Description | UM | Type | FB BIT | Def | Min | Max | Acc | Mod |
|---|---|---|---|---|---|---|---|---|---|---|
| **5.4.2** | **11008** | **Mechanical calc mode** | | INT16 | | 0 | 0 | 1 | ERW | FVS |

Setting of the method for calculating the unit of measure, depending on the speed of the cabin and of the motor (Direct method) or according to the mechanical ratios (Mechanical data method).

**0** Direct method
**1** Mechanical data

| Menu | PAR | Description | UM | Type | FB BIT | Def | Min | Max | Acc | Mod |
|---|---|---|---|---|---|---|---|---|---|---|
| **5.4.3** | **11010** | **Gearbox ratio** | | FLOAT | | 90 | | | ERW | FVS |

Setting of the ratio between the speed of the motor and of the pulley.

| Menu | PAR | Description | UM | Type | FB BIT | Def | Min | Max | Acc | Mod |
|---|---|---|---|---|---|---|---|---|---|---|
| **5.4.4** | **11012** | **Pulley diameter** | m | FLOAT | | 0.60 | | | ERW | FVS |

Setting of the diameter of the pulley.

| Menu | PAR | Description | UM | Type | FB BIT | Def | Min | Max | Acc | Mod |
|---|---|---|---|---|---|---|---|---|---|---|
| **5.4.5** | **11150** | **Car weight** | kg | FLOAT | | 0.00 | | | RW | FVS |

Setting of the weight of the cabin.

| Menu | PAR | Description | UM | Type | FB BIT | Def | Min | Max | Acc | Mod |
|---|---|---|---|---|---|---|---|---|---|---|
| **5.4.6** | **11152** | **Counter weight** | kg | FLOAT | | 0.00 | | | RW | FVS |

Setting of the weight of the counterweight.

| Menu | PAR | Description | UM | Type | FB BIT | Def | Min | Max | Acc | Mod |
|---|---|---|---|---|---|---|---|---|---|---|
| **5.4.7** | **11154** | **Load weight** | kg | FLOAT | | 0.00 | | | RW | FVS |

Setting of the weight of the maximum load for system dimensions.

| Menu | PAR | Description | UM | Type | FB BIT | Def | Min | Max | Acc | Mod |
|---|---|---|---|---|---|---|---|---|---|---|
| **5.4.8** | **11156** | **Rope weight** | kg | FLOAT | | 0.00 | | | RW | FVS |

Setting of the weight of the cable.

| Menu | PAR | Description | UM | Type | FB BIT | Def | Min | Max | Acc | Mod |
|---|---|---|---|---|---|---|---|---|---|---|
| **5.4.9** | **11158** | **Gearbox inertia** | $kgm^2$ | FLOAT | | 0.00 | | | RW | FVS |

Setting of the inertia of the mechanical reducer.

| Menu | PAR | Description | UM | Type | FB BIT | Def | Min | Max | Acc | Mod |
|---|---|---|---|---|---|---|---|---|---|---|
| **5.4.10** | **11160** | **Motor inertia** | $kgm^2$ | FLOAT | | 0.00 | | | RW | FVS |

Setting of the motor inertia.

| Menu | PAR | Description | UM | Type | FB BIT | Def | Min | Max | Acc | Mod |
|---|---|---|---|---|---|---|---|---|---|---|
| **5.4.11** | **11162** | **Calc spd reg gains** | | ENUM | INT | 0 | 0 | 1 | RW | F__ |

If enabled this writes the inertia value in parameter 2240 **Inertia**, calculates the gains of the speed loop, sets parameters 2200 to 2210 to 100% and writes the calculated values in parameters 2236 **Speed reg P gain**, 2238 **Speed reg I time** and 2242 **Bandwidth**. The value of the parameter is automatically reset to 0 once calculation starts.

| Menu | PAR | Description | UM | Type | FB BIT | Def | Min | Max | Acc | Mod |
|---|---|---|---|---|---|---|---|---|---|---|
| **5.4.12** | **12020** | **Inertia calculated** | $kgm^2$ | FLOAT | | 0 | | | R | FVS |

The inertia of the system with half load applied to the motor is displayed. This value can be entered in the Inertia parameter in the “16 - SPEED REG GAINS” menu.

| Menu | PAR | Description | UM | Type | FB BIT | Def | Min | Max | Acc | Mod |
|---|---|---|---|---|---|---|---|---|---|---|
| **5.4.13** | **12022** | **SpeedLineCalc** | m/s | FLOAT | | 0 | | | R | FVS |

The linear speed in m/s calculated using the 11010 **Gearbox ratio** and 11012 **Pulley diameter** parameters is displayed.

## 5.5 – DISTANCE

Use of the distances facilitates positioning of the deceleration sensors and is helpful for managing short floors.

The aim of the function that considers distances is to start decelerating from high speed in order to reach the approach speed in proximity to the landing zone.

Up to a maximum of 8 different slow down distances can be managed (real distance between the start of the sensor and the floor) associated with the different multispeeds. The distance to be used is selected after enabling the drive, before the cabin starts to move. Different distances cannot be selected while the cabin is travelling.

If the slow down distance is shorter than the real deceleration distance for the selected target speed, the speed is automatically limited so that the stop is always correct. When this speed limiter is enabled a **Speed target** alarm (warning) is generated.

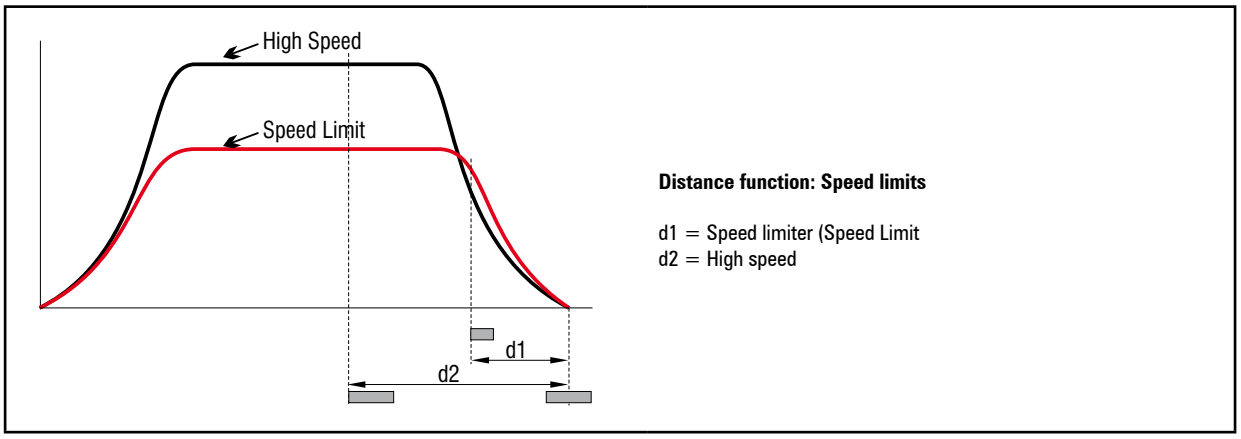


If the slow down sensor is met during acceleration, the distance required to terminate the acceleration and deceleration phases may be greater than the distance available: in that case the last acceleration jerk is increased to enable correct landing.

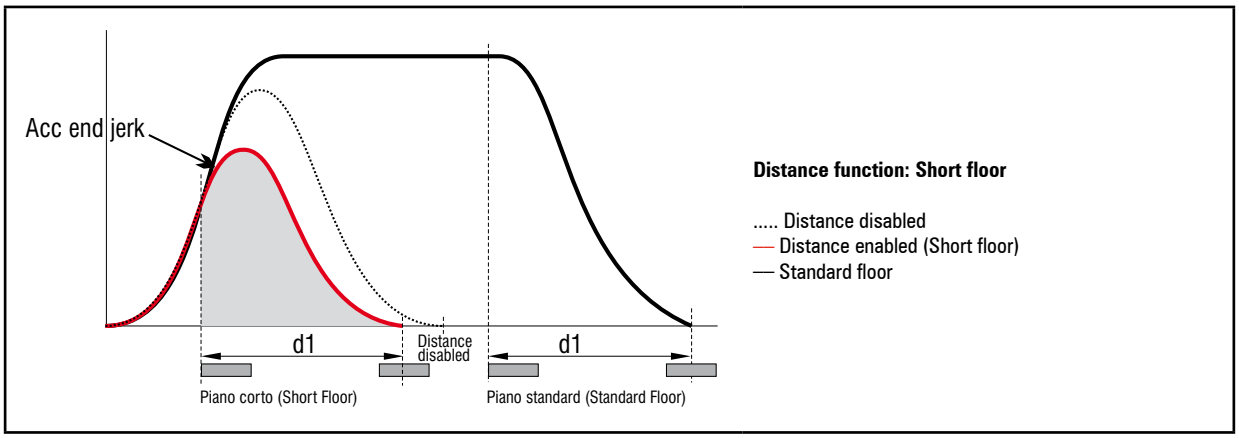


Also note that when the position sensor is not enabled in the landing zone, its exact length is not known. To ensure correct deceleration this distance is estimated on the basis of the value entered in the **Landing zone dist** parameter.

When this is equal to zero the distance is calculated on the basis of the value of the low speed and deceleration parameters and shown in the **Landing zone space** parameter. The user should make sure this distance is approximately the real length of the landing zone.

In FOC mode the distance is calculated by reading the encoder position.

In the SSC and SLS modes the distance is estimated (SpdRef*Time) and is thus subject to errors due to the difference between the real speed of the motor and the speed reference.

| Menu | PAR | Description | UM | Type | FB BIT | Def | Min | Max | Acc | Mod |
|---|---|---|---|---|---|---|---|---|---|---|
| **5.5.1** | **11102** | **Distance multispeed0** | m | FLOAT | | 0.00 | 0.00 | 10.00 | RW | FVS |
| | | Setting of the value of the distance associated with **multispeed 0**. | | | | | | | | |

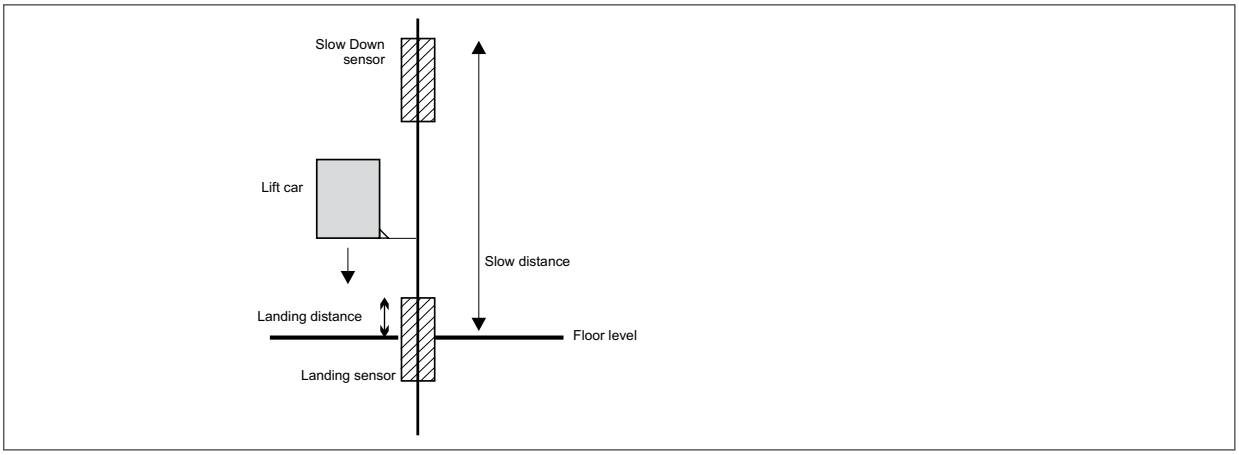


| Menu | PAR | Description | UM | Type | FB BIT | Def | Min | Max | Acc | Mod |
|---|---|---|---|---|---|---|---|---|---|---|
| **5.5.2** | **11104** | **Distance multispeed1** | m | FLOAT | | 0.00 | 0.00 | 10.00 | RW | FVS |

Setting of the value of the distance associated with **multispeed 1**.

| Menu | PAR | Description | UM | Type | FB BIT | Def | Min | Max | Acc | Mod |
|---|---|---|---|---|---|---|---|---|---|---|
| **5.5.3** | **11106** | **Distance multispeed2** | m | FLOAT | | 0.00 | 0.00 | 10.00 | RW | FVS |

Setting of the value of the distance associated with **multispeed 2**.

| Menu | PAR | Description | UM | Type | FB BIT | Def | Min | Max | Acc | Mod |
|---|---|---|---|---|---|---|---|---|---|---|
| **5.5.4** | **11110** | **Distance multispeed3** | m | FLOAT | | 0.00 | 0.00 | 10.00 | RW | FVS |

Setting of the value of the distance associated with **multispeed 3**.

| Menu | PAR | Description | UM | Type | FB BIT | Def | Min | Max | Acc | Mod |
|---|---|---|---|---|---|---|---|---|---|---|
| **5.5.5** | **11112** | **Distance multispeed4** | m | FLOAT | | 0.00 | 0.00 | 10.00 | RW | FVS |

Setting of the value of the distance associated with **multispeed 4**.

| Menu | PAR | Description | UM | Type | FB BIT | Def | Min | Max | Acc | Mod |
|---|---|---|---|---|---|---|---|---|---|---|
| **5.5.6** | **11114** | **Distance multispeed5** | m | FLOAT | | 0.00 | 0.00 | 10.00 | RW | FVS |

Setting of the value of the distance associated with **multispeed 5**.

| Menu | PAR | Description | UM | Type | FB BIT | Def | Min | Max | Acc | Mod |
|---|---|---|---|---|---|---|---|---|---|---|
| **5.5.7** | **11116** | **Distance multispeed6** | m | FLOAT | | 0.00 | 0.00 | 10.00 | RW | FVS |

Setting of the value of the distance associated with **multispeed 6**.

| Menu | PAR | Description | UM | Type | FB BIT | Def | Min | Max | Acc | Mod |
|---|---|---|---|---|---|---|---|---|---|---|
| **5.5.8** | **11118** | **Distance multispeed7** | m | FLOAT | | 0.00 | 0.00 | 10.00 | RW | FVS |

Setting of the value of the distance associated with **multispeed 7**.

| Menu | PAR | Description | UM | Type | FB BIT | Def | Min | Max | Acc | Mod |
|---|---|---|---|---|---|---|---|---|---|---|
| **5.5.9** | **11120** | **Slow speed** | | UINT16 | | 0 | 0 | 9 | RW | FVS |

Setting of the floor approach speed.

The **Slow speed** is the speed of approach to the landing zone. When the multispeed associated with the **Slow speed** is selected the slow down space is checked in order to reach this speed in proximity to the landing zone.

**0** Autoselect
**1** Multispeed 0
**2** Multispeed 1
**3** Multispeed 2
**4** Multispeed 3
**5** Multispeed 4
**6** Multispeed 5
**7** Multispeed 6

**8** Multispeed 7
**9** Null

When mode **0** (**Autoselect**) is selected, **Slow speed** is automatically connected to the multispeed with absolute value of less and other than zero. If repositioning speeds with a value of less than the **Slow speed** are used, the multispeed corresponding to the floor approach speed must be set.

When mode 9 (**Null**) is selected the floor approach spaces are never controlled. In this case the profile depends exclusively on the multispeed selected.

| Menu | PAR | Description | UM | Type | FB BIT | Def | Min | Max | Acc | Mod |
|---|---|---|---|---|---|---|---|---|---|---|
| **5.5.10** | **11130** | **Enable landing sel** | | INT16 | | 0 | 0 | 1 | RW | FVS |

Setting for enabling space control in the landing zone.

This function enables the cabin to arrive exactly at floor level by controlling the position of the encoder in the landing zone sensor. Position control is only possible if an encoder is used (normally in FOC-BRS). SSC and SLS modes simply generate an appropriate profile on the position reference.

When the function is enabled, the **Slow speed**, PAR 11120 (speed at which the cabin enters the landing zone) no longer depends on the relative multispeed but is calculated automatically according to the jerk and deceleration values to enable stopping without exceeding the set limits.

The value of **Slow speed** (PAR 11120 = 1...8) is calculated using the jerk and deceleration values not multiplied by the ramp factor.

During the landing procedure the speed profile is calculated using the fifth-degree polynomial method.

Direct arrival at floor level is also possible, without using the **Slow speed**. This is done by setting the **Slow speed** multispeed value to zero.

**0** Off
**1** On

Given the solution that has been selected to calculate the speed profile, before enabling the landing zone function it is important to verify the exactness of the spaces that have been entered (for both slow down and landing), and of the mechanical constants. Incorrect spaces could result in sudden decelerations and errors in arrival at floor level.

| Menu | PAR | Description | UM | Type | FB BIT | Def | Min | Max | Acc | Mod |
|---|---|---|---|---|---|---|---|---|---|---|
| **5.5.11** | **11132** | **Landing zone dist** | m | FLOAT | | 0.12 | 0 | 10.00 | RW | FVS |

Setting of the landing zone distance.

| Menu | PAR | Description | UM | Type | FB BIT | Def | Min | Max | Acc | Mod |
|---|---|---|---|---|---|---|---|---|---|---|
| **5.5.12** | **11138** | **Out floor function** | | BIT | | 0 | 0 | 1 | RW | FVS |

Enabling of the safe start function when not at floor level. This function enables recognition of arrival at floor level, which is assumed to be correct if the landing zone phase is performed.

If a correct stopping sequence is not recognised this means an emergency stop command has been sent, after which a low speed start is generated.

The restart procedure depends on the stop position as shown in the figure.

0 OFF
1 ON

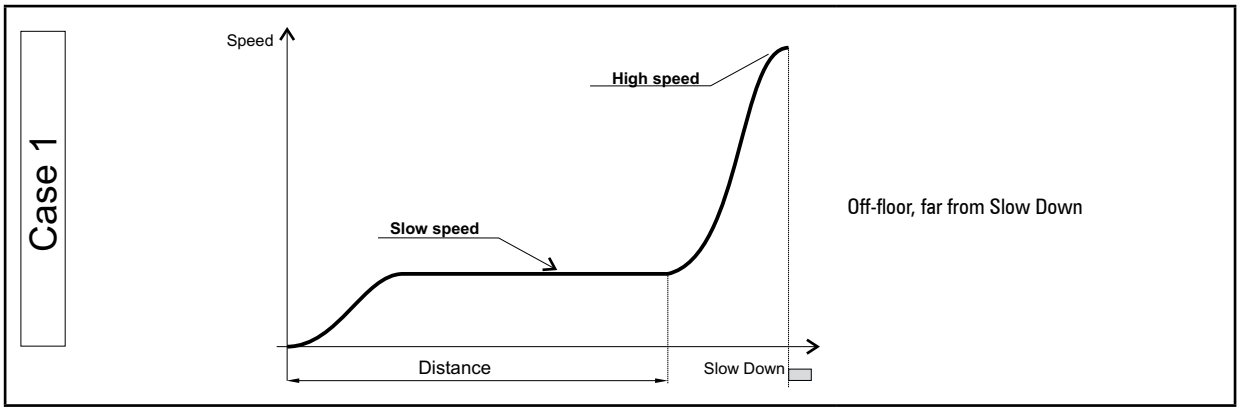

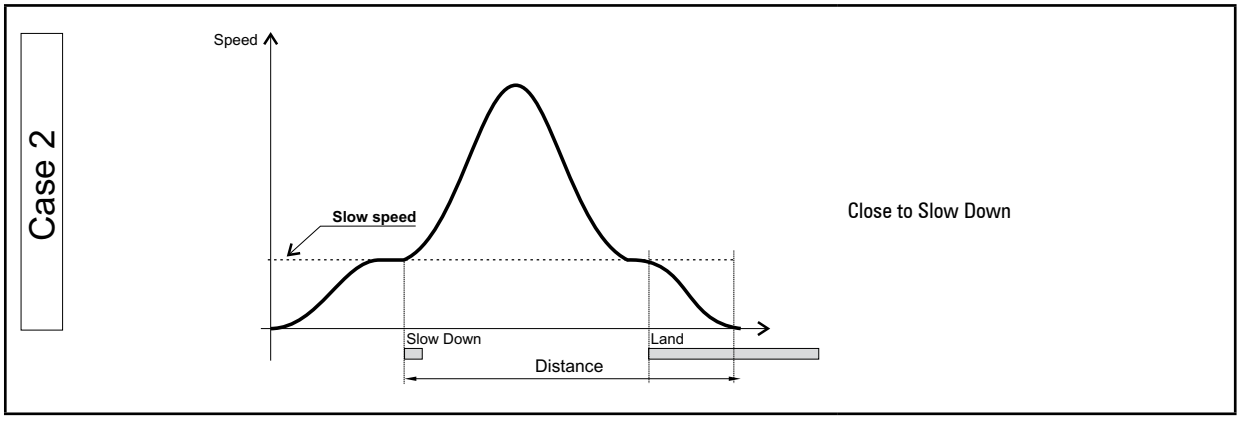


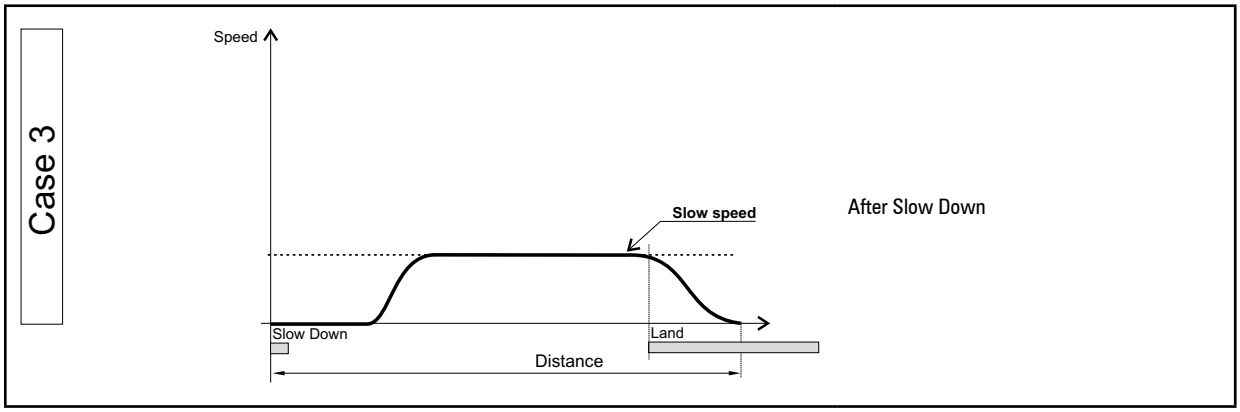


| Menu | PAR | Description | UM | Type | FB BIT | Def | Min | Max | Acc | Mod |
|---|---|---|---|---|---|---|---|---|---|---|
| **5.5.13** | **11140** | **Delay acq time** | ms | FLOAT | | 15 | 0.00 | 10.00 | RW | FVS |

Setting of the delay time for sending the slow down signal.

The value of this parameter is used to compensate for the distance covered during the delay time between the passage of the cabin on the slow down sensor and receipt of the decelerate command by the drive. At high speeds this distance can have significant values: e.g. with a cabin travelling at 2 m/s and a delay time of 30 ms, the distance covered and to be taken into consideration during the deceleration phase is 6 cm.

| Menu | PAR | Description | UM | Type | FB BIT | Def | Min | Max | Acc | Mod |
|---|---|---|---|---|---|---|---|---|---|---|
| **5.5.14** | **11142** | **Calc space hi-speed** | | UINT16 | | 1 | 0 | 8 | RW | FVS |

Setting of the high speed to be used to calculate distances.

**0** Multispeed 0
**1** Multispeed 1
**2** Multispeed 2
**3** Multispeed 3
**4** Multispeed 4
**5** Multispeed 5
**6** Multispeed 6
**7** Multispeed 7
**8** Null

| Menu | PAR | Description | UM | Type | FB BIT | Def | Min | Max | Acc | Mod |
|---|---|---|---|---|---|---|---|---|---|---|
| **5.5.15** | **11276** | **Kp Landing** | | Float | | 0.0000 | 0 | 100 | RW | FVS |

Lets you configure proportional gain to control the landing curve.

| Menu | PAR | Description | UM | Type | FB BIT | Def | Min | Max | Acc | Mod |
|---|---|---|---|---|---|---|---|---|---|---|
| **5.5.16** | **12030** | **Acceleration space** | m | FLOAT | | 0 | | | R | FVS |

The distance necessary to accelerate from zero speed to the high speed selected in the previous parameter is displayed.

| Menu | PAR | Description | UM | Type | FB BIT | Def | Min | Max | Acc | Mod |
|---|---|---|---|---|---|---|---|---|---|---|
| **5.5.17** | **12032** | **Deceleration space** | m | FLOAT | | 0 | | | R | FVS |

The distance necessary to stop from the high speed is displayed.

Different methods are used to calculate this distance, depending on the value of the relative parameters:

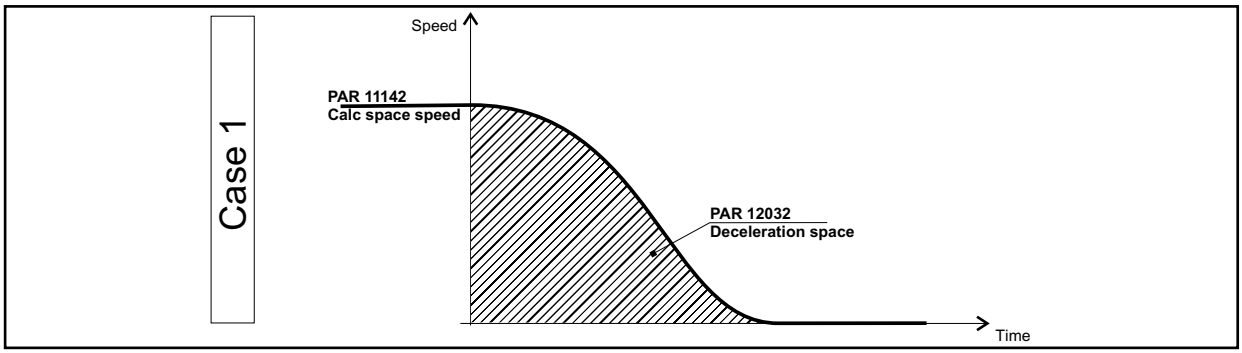


- **Case 1**: -shaped ramp from high speed to zero speed

**Distance multispeed0** (PAR 11102) = 0, **Enable landing sel** (PAR 11130) = Disabled, **Slow speed** (PAR 11120) = Zero.

**Deceleration space** (PAR 12032) the distance covered during the stop ramp from **Calc space hi-speed** (PAR 11142) (high speed) to zero speed.

The parameters that influence the calculation of this distance are: **Calc space hi-speed** (PAR 11142), **Percent dec factor** (PAR 11056), **Dec ini jerk** (PAR 11046), **Deceleration** (PAR 11048) and **Dec end jerk** (PAR 11050).

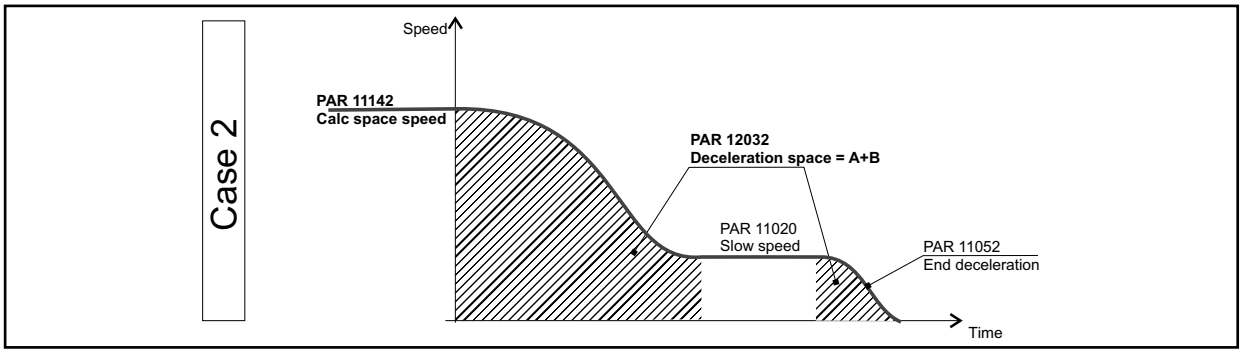


- **Case 2**: S-shaped ramp from high to low speed, low speed zone and subsequent stop

**Distance multispeed0** (PAR 11102) = 0, **Enable landing sel** (PAR 11130) = Disabled, **Slow speed** (PAR 11120) = Multi-speed 0.

**Deceleration space** (PAR 12032) is the distance covered during the slow down ramp from **Calc space hi-speed** (PAR 11142) (high speed) to **Multispeed 0** and during the stop ramp from **Calc space hi-speed** (PAR 11142) to zero speed. It does not include the distance covered at constant speed (Low speed).

The parameters that influence the calculation of this distance are: **Calc space hi-speed** (PAR 11142), [11022] **Multispeed 0** (PAR 11020), **Percent dec factor** (PAR 11056), **Dec ini jerk** (PAR 11046), **Deceleration** (PAR 11048), **Dec end jerk** (PAR 11050) and **Stop deceleration** (PAR 11052).

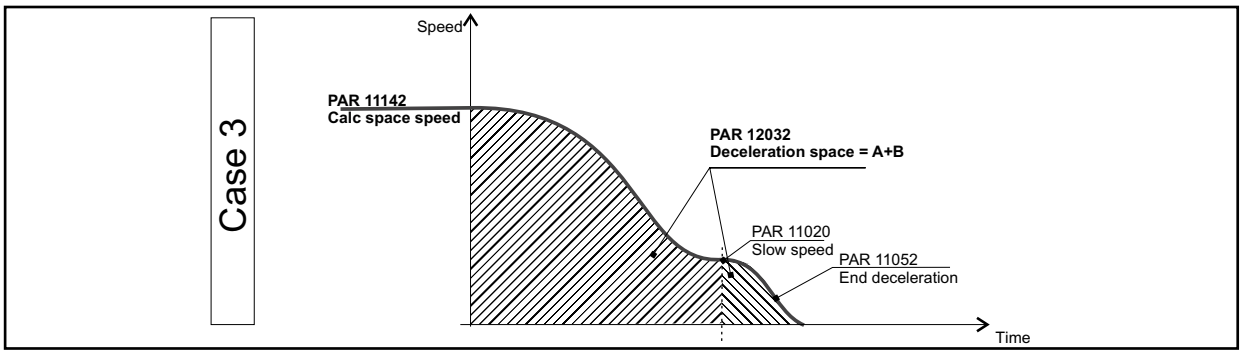


- **Case 3**: S-shaped ramp from high to low speed, low speed zone and subsequent stop

**Distance multispeed0** (PAR 11102) ≠ 0 (es.0.5m), **Enable landing sel** (PAR 11130) = Disabled, **Slow speed** (PAR 11120) = Multispeed 0.

**Deceleration space** (PAR 12032) is the distance covered during the slow down ramp from **Calc space hi-speed** (PAR 11142) to **Multispeed 0** and during the stop ramp from **Calc space hi-speed** (PAR 11142) to zero speed. It does not include the distance covered at constant speed (Low speed).

The parameters that influence the calculation of this distance are: **Calc space hi-speed** (PAR 11142), [11022] **Multispeed 0** (11020), **Percent dec factor** (PAR 11056), **Dec ini jerk** (PAR 11046), **Deceleration** (PAR 11048) and **Dec end jerk** (PAR 11050).

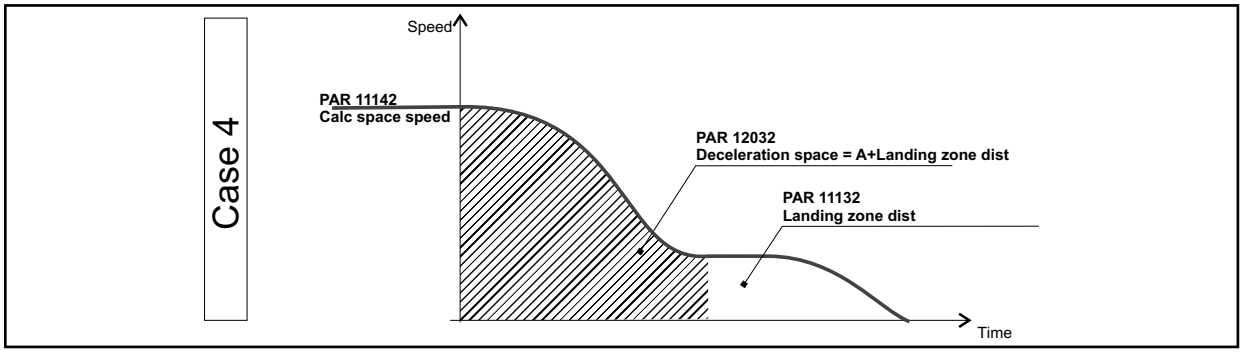


- **Case 4**: S-shaped ramp from high to low speed, low speed zone and subsequent stop with “landing control”

**Distance multispeed0** (PAR 11102) ≠ 0 (es.0.5m), **Enable landing sel** (PAR 11130) = Enabled, **Slow speed** (PAR 11120) = Multispeed 0.

**Deceleration space** (PAR 12032) is the distance covered during the slow down ramp from **Calc space hi-speed** (PAR 11142) (high speed) to **Multispeed 0** plus **Landing zone dist** (PAR 11132).

The parameters that influence the calculation of this distance are: **Calc space hi-speed** (PAR 11142), [11022] **Multispeed 0** (PAR 11020), **Percent dec factor** (PAR 11056), **Dec ini jerk** (PAR 11046), **Deceleration** (PAR 11048) and **Dec end jerk** (PAR 11050)

| Menu | PAR | Description | UM | Type | FB BIT | Def | Min | Max | Acc | Mod |
|---|---|---|---|---|---|---|---|---|---|---|
| **5.5.18** | **12034** | **Landing zone space** | m | FLOAT | | 0 | | | R | FVS |

The landing zone space is displayed. If this parameter is set to a value other than zero, this variable has the same value as the parameter, if **Landing zone space** = 0 this variable assumes the value of the distance necessary to decelerate from the speed set in **Slow speed** to zero using the ramp values not multiplied by the **Percent dec factor**.

## 5.6 – EMERGENCY MODE

The possibility of operating on an emergency module power supply has been implemented in the drive, to overcome the problem of sudden power failures.

The emergency operation condition signal must be connected to the **Emergency** command input (digital input 3 as default) which, if active, disables the **undervoltage** alarm so that the drive can operate powered on the DC link by the EMS emergency module (which is in turn powered by a buffer battery pack).

In order to use batteries with a lower power rating, a function has been implemented to allow the desired direction of travel to be selected before starting an emergency start procedure.

The direction is selected after testing the movement in both directions, choosing the one that requires less current (for more details see EMS manual).

In case of a blackout the drive can be powered by an Emergency Module Supplier (EMS) or by an Uninterruptible Power Supply (UPS).

The emergency function signal must be connected to the input of the Emergency Mode command (default digital input DI3).

### Operation with Emergency Module Supplier (EMS)

If digital input 3 DI3 is active, the Undervoltage (UV) alarm refers to the value set in parameter 448 (menu 4), allowing the drive to run powered on the DC link. See the ADL300 Quick Start manual (paragraph 7.3.3) and the EMS Manual for the connection.

### Operation with Single-phase Uninterruptible Power Supply (UPS)

When the emergency is activated by digital input DI3, the Drive can be powered by a 230V single-phase UPS. See the ADL300 Quick Start manual (paragraph 7.3.3) for the connection.

### Arrival at floor in Emergency

For both closed-loop and open-loop configurations, arrival at the floor in an emergency is managed by trying to optimize the request for current to the emergency modules.

The drive can select the more favorable direction for arriving at the floor without forward/reverse movements, thereby protecting the parts in emergency.

| Menu | PAR | Description | UM | Type | FB BIT | Def | Min | Max | Acc | Mod |
|---|---|---|---|---|---|---|---|---|---|---|
| **5.6.1** | **11260** | **Speed emergency mode** | Hz | FLOAT | | 5.00 | 3.40E+94 | 3.40E+94 | RW | FVS |

Setting of the speed during movements in the emergency operation condition. Given the low voltage, high speeds cannot be reached with the drive powered by battery (or emergency module). The speed selected in the multispeed parameter is therefore ignored and this value is used instead.

| Menu | PAR | Description | UM | Type | FB BIT | Def | Min | Max | Acc | Mod |
|---|---|---|---|---|---|---|---|---|---|---|
| **5.6.2** | **11262** | **Autoselect direction** | | BIT | | 0 | 0 | 2 | ERW | FVS |

Enabling of automatic selection of preferred direction before an emergency start.

**0** OFF
**1** ON
**2** Recommended

This parameter lets you select how the drive calculates the more favorable riding direction of the cabin when it is in emergency mode.

If 0 is selected, the drive does not calculate the more favorable direction, which is commanded manually.

If 1 is selected, as soon as the drive is in emergency condition it moves the motor with alternating forward and reverse movements, calculating the value of the current delivered in each direction, and selects the more favorable one (less current requested).

If 2 is selected (recommended mode), the drive evaluates the more favorable direction without making alternating forward and reverse movements (avoiding requests for current from the EMS or UPS), already knowing the more favorable direction because it had already calculated it based on the value of current delivered and on the DC-Link voltage. If the drive was in regeneration before the emergency, it keeps the same riding direction in emergency; if the drive was not in regeneration but was delivering current at a value below the value set in parameter PAR 11284 **Detection Limit**, it keeps the same riding direction. Otherwise, the drive changes riding direction and considers the previous one unfavorable.

| Menu | PAR | Description | UM | Type | FB BIT | Def | Min | Max | Acc | Mod |
|---|---|---|---|---|---|---|---|---|---|---|
| **5.6.3** | **11278** | **Em Dc brk current** | | FLOAT | | 75.0 | 0 | 150 | RW | FVS |

The parameter lets you set the braking current value by injecting DC in the motor windings. You can limit this value and avoid overloading the emergency batteries.

| Menu | PAR | Description | UM | Type | FB BIT | Def | Min | Max | Acc | Mod |
|---|---|---|---|---|---|---|---|---|---|---|
| **5.6.4** | **11284** | **Detection Limit** | PERC | LONG | | 50 | 0 | 100 | RW | FVS |

This is the current limit value delivered by the drive (expressed as a percentage of nominal current) to select the more favorable riding direction in **Recommended** mode (see PAR 11262).

| Menu | PAR | Description | UM | Type | FB BIT | Def | Min | Max | Acc | Mod |
|---|---|---|---|---|---|---|---|---|---|---|
| **5.6.5** | **12282** | **Chosen Direction** | | INT | | 0 | 0 | 2 | R | FVS |

Indicates the direction selected by the drive during the emergency.

**0 No direction selected**
**1 Forward**
**2 Reverse**

The association Forward/Reverse and Up/Down depends on how the connection to the motor was made.

## 5.7 – INPUT/OUTPUT

**Inputs**

The lift application input commands can be connected to a signal via a selector in order to choose from a series of possibilities available in the input list.

Generally speaking a signal can be connected to a digital input, to certain internal signals and to a bit of the Decomp word bit. This word is connected to a fieldbus processing channel (**PDC FieldBus M->S1**).

The set of digital inputs in a word is displayed in the Lift control word.

The commands used in the lift application are listed below

| Command | Description | Default Source |
|---|---|---|
| EnableCmd | Enable command | Dig input enable |
| StartFwdCmd | Start forward command | Dig input 1x |
| StartRevCmd | Start reverse command | Dig input 2x |
| MltSpd S0 | Multispeed 0 sel | Dig input 4x |
| MltSpd S1 | Multispeed 1 sel | Dig input 5x |
| MltSpd S2 | Multispeed 2 sel | Dig input 6x |
| ContFbk | Contactor close contact | Run cont mon |
| BrakeFbk | Brake close contact | Brake cont mon |
| DoorOpenEna | Source for enabling the door open function | Null |
| DoorFbk | Door close contact | Null |
| Emergency mode | Emergency operation command | Dig input 3x |
| InvRampSrc | Command to invert the speed direction | Null |
| UpperLimit | Travel upper limit signal | Null |
| LowerLimit | Travel lower limit signal | Null |

**Outputs**

The output signals of the lift control are connected directly to the PAD parameters as shown in the table below:

| PAR | | Signal | Description |
|---|---|---|---|
| 3700 | Lift enable | LiftEnable | Enable lift command |
| 3702 | Run cont mon | RunCont | Close contactor command |
| 3704 | Up cont mon | UpCont | Up contactor command |
| 3706 | Down cont mon | DownCont | Down contactor command |
| 3708 | Brake cont mon | BrakeCont | Brake command |
| 3710 | Lift dc brake | LiftDcBrake | DC brake function command |
| 3712 | Brake 2 mon | Brake2 | Brake control signal |
| 3714 | Door open mon | DoorOpen | Open door command |
| 3716 | Lift start | LiftStart | Start lift command |
| 3718 | PAD10 | ----- | |
| 3720 | Lift status word | Lift status word | Contains pairs of the StatusWord (selectable from SelLiftStatWord) |
| 3722 | PAD12 | ----- | |
| 3724 | PAD13 | ----- | |
| 3726 | Ramp down limit | ----- | Ramp down current limit |
| 3728 | PAD15 | ----- | |
| 3730 | Lift wdec input | LiftWdecInp | Connected to the selector for LifWDecomp |

These can be accessed from the selection lists and can thus easily be used to configure the relay and digital outputs of the drive. (refer to the PADS menu for configuration).

The set of lift output signals is contained in the LiftStatusWord, connected to PAR 3720 **Lift status word** and fieldbus Tx DW1:

| Bit | Description | Notes |
|---|---|---|
| 0 | LiftEnable | Enable lift command. |
| 1 | RunCont | Run command contactor |
| 2 | UpCont | Up command contactor |
| 3 | DownCont | Down command contactor |
| 4 | BrakeCont | Brake command contactor |
| 5 | LiftDcBrake | DC brake function command (firmware) |
| 6 | Brake2 | Brake control signal (see sequences) |
| 7 | DoorOpen | Open door command |
| 8 | Drive Ok | Drive not in alarm condition signal |
| 9 | SpeedIsZero | Speed less than 0 limit signal |
| 10 | SpeedRefIsZero | Speed reference less than 0 limit signal |
| 11 ... 12 | | |

### Multi speed configuration table

| Multi speed S2 sel | Multi speed S1 sel | Multi speed S0 sel | ACTIVE RAMP REF |
|---|---|---|---|
| 0 | 0 | 0 | Multi speed 0 |
| 0 | 0 | 1 | Multi speed 1 |
| 0 | 1 | 0 | Multi speed 2 |
| 0 | 1 | 1 | Multi speed 3 |
| 1 | 0 | 0 | Multi speed 4 |
| 1 | 0 | 1 | Multi speed 5 |
| 1 | 1 | 0 | Multi speed 6 |
| 1 | 1 | 1 | Multi speed 7 |

| Menu | PAR | Description | UM | Type | FB BIT | Def | Min | Max | Acc | Mod |
|---|---|---|---|---|---|---|---|---|---|---|
| **5.7.1** | **11220** | **Lift enable cmd sel** | | ENUM | | 1110 | 0 | 35 | ERW | FVS |

Setting of the source for the enable command.

**1110** Digit input E
**1210** Digit input 1x
**1212** Digit input 2x
**1214** Digit input 3x
**1216** Digit input 4x
**1218** Digit input 5x
**1220** Digit input 6x
**1222** Digit input 7x
**1224** Digit input 8x
**1226** Digit input 9x
**1228** Digit input 10x
**1230** Digit input 11x
**1232** Digit input 12x
**3702** Run cont mon
**3706** Down cont mon
**3708** Brake cont mon
**3714** Door open mon
**3728** PAD 15
**6000** Null
**6002** One
**12250** B0 Lift decomp
**12252** B1 Lift decomp
**12254** B2 Lift decomp
**12256** B3 Lift decomp
**12258** B4 Lift decomp
**12260** B5 Lift decomp
**12262** B6 Lift decomp
**12264** B7 Lift decomp
**12266** B8 Lift decomp
**12268** B9 Lift decomp
**12270** B10 Lift decomp
**12272** B11 Lift decomp
**12274** B12 Lift decomp
**12276** B13 Lift decomp
**12278** B14 Lift decomp
**12280** B15 Lift decomp

| Menu | PAR | Description | UM | Type | FB BIT | Def | Min | Max | Acc | Mod |
|---|---|---|---|---|---|---|---|---|---|---|
| **5.7.2** | **11222** | **Start fwd cmd sel** | | ENUM | | 1210 | 0 | 35 | ERW | FVS |

Setting of the source for the start forward command.

**1110** Digit input E
**1210** Digit input 1x
**1212** Digit input 2x
**1214** Digit input 3x
**1216** Digit input 4x
**1218** Digit input 5x
**1220** Digit input 6x
**1222** Digit input 7x
**1224** Digit input 8x
**1226** Digit input 9x
**1228** Digit input 10x
**1230** Digit input 11x
**1232** Digit input 12x
**3702** Run cont mon

| | |
|---|---|
| **3706** | Down cont mon |
| **3708** | Brake cont mon |
| **3714** | Door open mon |
| **3728** | PAD 15 |
| **6000** | Null |
| **6002** | One |
| **12250** | B0 Lift decomp |
| **12252** | B1 Lift decomp |
| **12254** | B2 Lift decomp |
| **12256** | B3 Lift decomp |
| **12258** | B4 Lift decomp |
| **12260** | B5 Lift decomp |
| **12262** | B6 Lift decomp |
| **12264** | B7 Lift decomp |
| **12266** | B8 Lift decomp |
| **12268** | B9 Lift decomp |
| **12270** | B10 Lift decomp |
| **12272** | B11 Lift decomp |
| **12274** | B12 Lift decomp |
| **12276** | B13 Lift decomp |
| **12278** | B14 Lift decomp |
| **12280** | B15 Lift decomp |

| Menu | PAR | Description | UM | Type | FB BIT | Def | Min | Max | Acc | Mod |
|---|---|---|---|---|---|---|---|---|---|---|
| **5.7.3** | **11224** | **Start rev cmd sel** | | ENUM | | 1212 | 0 | 35 | ERW | FVS |

Setting of the source for the start reverse command.

| | |
|---|---|
| **1110** | Digit input E |
| **1210** | Digit input 1x |
| **1212** | Digit input 2x |
| **1214** | Digit input 3x |
| **1216** | Digit input 4x |
| **1218** | Digit input 5x |
| **1220** | Digit input 6x |
| **1222** | Digit input 7x |
| **1224** | Digit input 8x |
| **1226** | Digit input 9x |
| **1228** | Digit input 10x |
| **1230** | Digit input 11x |
| **1232** | Digit input 12x |
| **3702** | Run cont mon |
| **3706** | Down cont mon |
| **3708** | Brake cont mon |
| **3714** | Door open mon |
| **3728** | PAD 15 |
| **6000** | Null |
| **6002** | One |
| **12250** | B0 Lift decomp |
| **12252** | B1 Lift decomp |
| **12254** | B2 Lift decomp |
| **12256** | B3 Lift decomp |
| **12258** | B4 Lift decomp |
| **12260** | B5 Lift decomp |
| **12262** | B6 Lift decomp |
| **12264** | B7 Lift decomp |
| **12266** | B8 Lift decomp |
| **12268** | B9 Lift decomp |
| **12270** | B10 Lift decomp |
| **12272** | B11 Lift decomp |
| **12274** | B12 Lift decomp |
| **12276** | B13 Lift decomp |
| **12278** | B14 Lift decomp |
| **12280** | B15 Lift decomp |

| Menu | PAR | Description | UM | Type | FB BIT | Def | Min | Max | Acc | Mod |
|---|---|---|---|---|---|---|---|---|---|---|
| **5.7.4** | **11226** | **Multi speed S0 sel** | | ENUM | | 1216 | 0 | 35 | ERW | FVS |

Setting of the source for the first multispeed selection bit.

| | |
|---|---|
| **1110** | Digit input E |
| **1210** | Digit input 1x |
| **1212** | Digit input 2x |
| **1214** | Digit input 3x |

| | |
|---|---|
| **1216** | Digit input 4x |
| **1218** | Digit input 5x |
| **1220** | Digit input 6x |
| **1222** | Digit input 7x |
| **1224** | Digit input 8x |
| **1226** | Digit input 9x |
| **1228** | Digit input 10x |
| **1230** | Digit input 11x |
| **1232** | Digit input 12x |
| **3702** | Run cont mon |
| **3706** | Down cont mon |
| **3708** | Brake cont mon |
| **3714** | Door open mon |
| **3728** | PAD 15 |
| **6000** | Null |
| **6002** | One |
| **12250** | B0 Lift decomp |
| **12252** | B1 Lift decomp |
| **12254** | B2 Lift decomp |
| **12256** | B3 Lift decomp |
| **12258** | B4 Lift decomp |
| **12260** | B5 Lift decomp |
| **12262** | B6 Lift decomp |
| **12264** | B7 Lift decomp |
| **12266** | B8 Lift decomp |
| **12268** | B9 Lift decomp |
| **12270** | B10 Lift decomp |
| **12272** | B11 Lift decomp |
| **12274** | B12 Lift decomp |
| **12276** | B13 Lift decomp |
| **12278** | B14 Lift decomp |
| **12280** | B15 Lift decomp |

| Menu | PAR | Description | UM | Type | FB BIT | Def | Min | Max | Acc | Mod |
|---|---|---|---|---|---|---|---|---|---|---|
| **5.7.5** | **11228** | **Multi speed S1 sel** | | ENUM | | 1218 | 0 | 35 | ERW | FVS |

Setting of the source for the second multispeed selection bit.

| | |
|---|---|
| **1110** | Digit input E |
| **1210** | Digit input 1x |
| **1212** | Digit input 2x |
| **1214** | Digit input 3x |
| **1216** | Digit input 4x |
| **1218** | Digit input 5x |
| **1220** | Digit input 6x |
| **1222** | Digit input 7x |
| **1224** | Digit input 8x |
| **1226** | Digit input 9x |
| **1228** | Digit input 10x |
| **1230** | Digit input 11x |
| **1232** | Digit input 12x |
| **3702** | Run cont mon |
| **3706** | Down cont mon |
| **3708** | Brake cont mon |
| **3714** | Door open mon |
| **3728** | PAD 15 |
| **6000** | Null |
| **6002** | One |
| **12250** | B0 Lift decomp |
| **12252** | B1 Lift decomp |
| **12254** | B2 Lift decomp |
| **12256** | B3 Lift decomp |
| **12258** | B4 Lift decomp |
| **12260** | B5 Lift decomp |
| **12262** | B6 Lift decomp |
| **12264** | B7 Lift decomp |
| **12266** | B8 Lift decomp |
| **12268** | B9 Lift decomp |
| **12270** | B10 Lift decomp |
| **12272** | B11 Lift decomp |
| **12274** | B12 Lift decomp |
| **12276** | B13 Lift decomp |
| **12278** | B14 Lift decomp |
| **12280** | B15 Lift decomp |

| Menu | PAR | Description | UM | Type | FB BIT | Def | Min | Max | Acc | Mod |
|---|---|---|---|---|---|---|---|---|---|---|
| **5.7.6** | **11230** | **Multi speed S2 sel** | | ENUM | | 1220 | 0 | 35 | ERW | FVS |

Setting of the source for the third multispeed selection bit.

| | |
|---|---|
| **1110** | Digit input E |
| **1210** | Digit input 1x |
| **1212** | Digit input 2x |
| **1214** | Digit input 3x |
| **1216** | Digit input 4x |
| **1218** | Digit input 5x |
| **1220** | Digit input 6x |
| **1222** | Digit input 7x |
| **1224** | Digit input 8x |
| **1226** | Digit input 9x |
| **1228** | Digit input 10x |
| **1230** | Digit input 11x |
| **1232** | Digit input 12x |
| **3702** | Run cont mon |
| **3706** | Down cont mon |
| **3708** | Brake cont mon |
| **3714** | Door open mon |
| **3728** | PAD 15 |
| **6000** | Null |
| **6002** | One |
| **12250** | B0 Lift decomp |
| **12252** | B1 Lift decomp |
| **12254** | B2 Lift decomp |
| **12256** | B3 Lift decomp |
| **12258** | B4 Lift decomp |
| **12260** | B5 Lift decomp |
| **12262** | B6 Lift decomp |
| **12264** | B7 Lift decomp |
| **12266** | B8 Lift decomp |
| **12268** | B9 Lift decomp |
| **12270** | B10 Lift decomp |
| **12272** | B11 Lift decomp |
| **12274** | B12 Lift decomp |
| **12276** | B13 Lift decomp |
| **12278** | B14 Lift decomp |
| **12280** | B15 Lift decomp |

| Menu | PAR | Description | UM | Type | FB BIT | Def | Min | Max | Acc | Mod |
|---|---|---|---|---|---|---|---|---|---|---|
| **5.7.7** | **11232** | **Contactor fbk sel** | | ENUM | | 3702 | 0 | 35 | ERW | FVS |

Setting of the source of the contactor status signal.

| | |
|---|---|
| **1110** | Digit input E |
| **1210** | Digit input 1x |
| **1212** | Digit input 2x |
| **1214** | Digit input 3x |
| **1216** | Digit input 4x |
| **1218** | Digit input 5x |
| **1220** | Digit input 6x |
| **1222** | Digit input 7x |
| **1224** | Digit input 8x |
| **1226** | Digit input 9x |
| **1228** | Digit input 10x |
| **1230** | Digit input 11x |
| **1232** | Digit input 12x |
| **3702** | Run cont mon |
| **3706** | Down cont mon |
| **3708** | Brake cont mon |
| **3714** | Door open mon |
| **3728** | PAD 15 |
| **6000** | Null |
| **6002** | One |
| **12250** | B0 Lift decomp |
| **12252** | B1 Lift decomp |
| **12254** | B2 Lift decomp |
| **12256** | B3 Lift decomp |
| **12258** | B4 Lift decomp |
| **12260** | B5 Lift decomp |
| **12262** | B6 Lift decomp |
| **12264** | B7 Lift decomp |
| **12266** | B8 Lift decomp |

| | |
|---|---|
| **12268** | B9 Lift decomp |
| **12270** | B10 Lift decomp |
| **12272** | B11 Lift decomp |
| **12274** | B12 Lift decomp |
| **12276** | B13 Lift decomp |
| **12278** | B14 Lift decomp |
| **12280** | B15 Lift decomp |

| Menu | PAR | Description | UM | Type | FB BIT | Def | Min | Max | Acc | Mod |
|---|---|---|---|---|---|---|---|---|---|---|
| **5.7.8** | **11236** | **Brake fbk sel** | | ENUM | | 3708 | 0 | 35 | ERW | FVS |

Setting of the source of the brake status signal.

| | |
|---|---|
| **1110** | Digit input E |
| **1210** | Digit input 1x |
| **1212** | Digit input 2x |
| **1214** | Digit input 3x |
| **1216** | Digit input 4x |
| **1218** | Digit input 5x |
| **1220** | Digit input 6x |
| **1222** | Digit input 7x |
| **1224** | Digit input 8x |
| **1226** | Digit input 9x |
| **1228** | Digit input 10x |
| **1230** | Digit input 11x |
| **1232** | Digit input 12x |
| **3702** | Run cont mon |
| **3706** | Down cont mon |
| **3708** | Brake cont mon |
| **3714** | Door open mon |
| **3728** | PAD 15 |
| **6000** | Null |
| **6002** | One |
| **12250** | B0 Lift decomp |
| **12252** | B1 Lift decomp |
| **12254** | B2 Lift decomp |
| **12256** | B3 Lift decomp |
| **12258** | B4 Lift decomp |
| **12260** | B5 Lift decomp |
| **12262** | B6 Lift decomp |
| **12264** | B7 Lift decomp |
| **12266** | B8 Lift decomp |
| **12268** | B9 Lift decomp |
| **12270** | B10 Lift decomp |
| **12272** | B11 Lift decomp |
| **12274** | B12 Lift decomp |
| **12276** | B13 Lift decomp |
| **12278** | B14 Lift decomp |
| **12280** | B15 Lift decomp |

| Menu | PAR | Description | UM | Type | FB BIT | Def | Min | Max | Acc | Mod |
|---|---|---|---|---|---|---|---|---|---|---|
| **5.7.9** | **11238** | **Door open sel** | | ENUM | | 6000 | 0 | 35 | ERW | FVS |

Setting of the source to enable door closing control.

| | |
|---|---|
| **1110** | Digit input E |
| **1210** | Digit input 1x |
| **1212** | Digit input 2x |
| **1214** | Digit input 3x |
| **1216** | Digit input 4x |
| **1218** | Digit input 5x |
| **1220** | Digit input 6x |
| **1222** | Digit input 7x |
| **1224** | Digit input 8x |
| **1226** | Digit input 9x |
| **1228** | Digit input 10x |
| **1230** | Digit input 11x |
| **1232** | Digit input 12x |
| **3702** | Run cont mon |
| **3706** | Down cont mon |
| **3708** | Brake cont mon |
| **3714** | Door open mon |
| **3728** | PAD 15 |
| **6000** | Null |

| | |
|---|---|
| **6002** | One |
| **12250** | B0 Lift decomp |
| **12252** | B1 Lift decomp |
| **12254** | B2 Lift decomp |
| **12256** | B3 Lift decomp |
| **12258** | B4 Lift decomp |
| **12260** | B5 Lift decomp |
| **12262** | B6 Lift decomp |
| **12264** | B7 Lift decomp |
| **12266** | B8 Lift decomp |
| **12268** | B9 Lift decomp |
| **12270** | B10 Lift decomp |
| **12272** | B11 Lift decomp |
| **12274** | B12 Lift decomp |
| **12276** | B13 Lift decomp |
| **12278** | B14 Lift decomp |
| **12280** | B15 Lift decomp |

| Menu | PAR | Description | UM | Type | FB BIT | Def | Min | Max | Acc | Mod |
|---|---|---|---|---|---|---|---|---|---|---|
| **5.7.10** | **11240** | **Door feedback sel** | | ENUM | | 6000 | 0 | 35 | ERW | FVS |

Setting of the source of the door status signal.

| | |
|---|---|
| **1110** | Digit input E |
| **1210** | Digit input 1x |
| **1212** | Digit input 2x |
| **1214** | Digit input 3x |
| **1216** | Digit input 4x |
| **1218** | Digit input 5x |
| **1220** | Digit input 6x |
| **1222** | Digit input 7x |
| **1224** | Digit input 8x |
| **1226** | Digit input 9x |
| **1228** | Digit input 10x |
| **1230** | Digit input 11x |
| **1232** | Digit input 12x |
| **3702** | Run cont mon |
| **3706** | Down cont mon |
| **3708** | Brake cont mon |
| **3714** | Door open mon |
| **3728** | PAD 15 |
| **6000** | Null |
| **6002** | One |
| **12250** | B0 Lift decomp |
| **12252** | B1 Lift decomp |
| **12254** | B2 Lift decomp |
| **12256** | B3 Lift decomp |
| **12258** | B4 Lift decomp |
| **12260** | B5 Lift decomp |
| **12262** | B6 Lift decomp |
| **12264** | B7 Lift decomp |
| **12266** | B8 Lift decomp |
| **12268** | B9 Lift decomp |
| **12270** | B10 Lift decomp |
| **12272** | B11 Lift decomp |
| **12274** | B12 Lift decomp |
| **12276** | B13 Lift decomp |
| **12278** | B14 Lift decomp |
| **12280** | B15 Lift decomp |

| Menu | PAR | Description | UM | Type | FB BIT | Def | Min | Max | Acc | Mod |
|---|---|---|---|---|---|---|---|---|---|---|
| **5.7.11** | **11242** | **Emergency mode sel** | | ENUM | | 1214 | 0 | 35 | ERW | FVS |

Setting of the source of the emergency operation signal.

| | |
|---|---|
| **1110** | Digit input E |
| **1210** | Digit input 1x |
| **1212** | Digit input 2x |
| **1214** | Digit input 3x |
| **1216** | Digit input 4x |
| **1218** | Digit input 5x |
| **1220** | Digit input 6x |
| **1222** | Digit input 7x |
| **1224** | Digit input 8x |

| | |
|---|---|
| **1226** | Digit input 9x |
| **1228** | Digit input 10x |
| **1230** | Digit input 11x |
| **1232** | Digit input 12x |
| **3702** | Run cont mon |
| **3706** | Down cont mon |
| **3708** | Brake cont mon |
| **3714** | Door open mon |
| **3728** | PAD 15 |
| **6000** | Null |
| **6002** | One |
| **12250** | B0 Lift decomp |
| **12252** | B1 Lift decomp |
| **12254** | B2 Lift decomp |
| **12256** | B3 Lift decomp |
| **12258** | B4 Lift decomp |
| **12260** | B5 Lift decomp |
| **12262** | B6 Lift decomp |
| **12264** | B7 Lift decomp |
| **12266** | B8 Lift decomp |
| **12268** | B9 Lift decomp |
| **12270** | B10 Lift decomp |
| **12272** | B11 Lift decomp |
| **12274** | B12 Lift decomp |
| **12276** | B13 Lift decomp |
| **12278** | B14 Lift decomp |
| **12280** | B15 Lift decomp |

| Menu | PAR | Description | UM | Type | FB BIT | Def | Min | Max | Acc | Mod |
|---|---|---|---|---|---|---|---|---|---|---|
| **5.7.12** | **11244** | **Inversion ramp sel** | | ENUM | | 6000 | 0 | 35 | ERW | FVS |

Setting of the source of the command that inverts the direction of the output speed.

| | |
|---|---|
| **1110** | Digit input E |
| **1210** | Digit input 1x |
| **1212** | Digit input 2x |
| **1214** | Digit input 3x |
| **1216** | Digit input 4x |
| **1218** | Digit input 5x |
| **1220** | Digit input 6x |
| **1222** | Digit input 7x |
| **1224** | Digit input 8x |
| **1226** | Digit input 9x |
| **1228** | Digit input 10x |
| **1230** | Digit input 11x |
| **1232** | Digit input 12x |
| **3702** | Run cont mon |
| **3706** | Down cont mon |
| **3708** | Brake cont mon |
| **3714** | Door open mon |
| **3728** | PAD 15 |
| **6000** | Null |
| **6002** | One |
| **12250** | B0 Lift decomp |
| **12252** | B1 Lift decomp |
| **12254** | B2 Lift decomp |
| **12256** | B3 Lift decomp |
| **12258** | B4 Lift decomp |
| **12260** | B5 Lift decomp |
| **12262** | B6 Lift decomp |
| **12264** | B7 Lift decomp |
| **12266** | B8 Lift decomp |
| **12268** | B9 Lift decomp |
| **12270** | B10 Lift decomp |
| **12272** | B11 Lift decomp |
| **12274** | B12 Lift decomp |
| **12276** | B13 Lift decomp |
| **12278** | B14 Lift decomp |
| **12280** | B15 Lift decomp |

| Menu | PAR | Description | UM | Type | FB BIT | Def | Min | Max | Acc | Mod |
|---|---|---|---|---|---|---|---|---|---|---|
| **5.7.13** | **11246** | **Upper limit sel** | | ENUM | | 6000 | 0 | 35 | ERW | FVS |

Setting of the source of the upper limit enabling signal.

| | |
|---|---|
| **1110** | Digit input E |
| **1210** | Digit input 1x |
| **1212** | Digit input 2x |
| **1214** | Digit input 3x |
| **1216** | Digit input 4x |
| **1218** | Digit input 5x |
| **1220** | Digit input 6x |
| **1222** | Digit input 7x |
| **1224** | Digit input 8x |
| **1226** | Digit input 9x |
| **1228** | Digit input 10x |
| **1230** | Digit input 11x |
| **1232** | Digit input 12x |
| **3702** | Run cont mon |
| **3706** | Down cont mon |
| **3708** | Brake cont mon |
| **3714** | Door open mon |
| **3728** | PAD 15 |
| **6000** | Null |
| **6002** | One |
| **12250** | B0 Lift decomp |
| **12252** | B1 Lift decomp |
| **12254** | B2 Lift decomp |
| **12256** | B3 Lift decomp |
| **12258** | B4 Lift decomp |
| **12260** | B5 Lift decomp |
| **12262** | B6 Lift decomp |
| **12264** | B7 Lift decomp |
| **12266** | B8 Lift decomp |
| **12268** | B9 Lift decomp |
| **12270** | B10 Lift decomp |
| **12272** | B11 Lift decomp |
| **12274** | B12 Lift decomp |
| **12276** | B13 Lift decomp |
| **12278** | B14 Lift decomp |
| **12280** | B15 Lift decomp |

| Menu | PAR | Description | UM | Type | FB BIT | Def | Min | Max | Acc | Mod |
|---|---|---|---|---|---|---|---|---|---|---|
| **5.7.14** | **11248** | **Lower limit sel** | | ENUM | | 6000 | 0 | 35 | ERW | FVS |

Setting of the source of the lower limit enabling signal.

| | |
|---|---|
| **1110** | Digit input E |
| **1210** | Digit input 1x |
| **1212** | Digit input 2x |
| **1214** | Digit input 3x |
| **1216** | Digit input 4x |
| **1218** | Digit input 5x |
| **1220** | Digit input 6x |
| **1222** | Digit input 7x |
| **1224** | Digit input 8x |
| **1226** | Digit input 9x |
| **1228** | Digit input 10x |
| **1230** | Digit input 11x |
| **1232** | Digit input 12x |
| **3702** | Run cont mon |
| **3706** | Down cont mon |
| **3708** | Brake cont mon |
| **3714** | Door open mon |
| **3728** | PAD 15 |
| **6000** | Null |
| **6002** | One |
| **12250** | B0 Lift decomp |
| **12252** | B1 Lift decomp |
| **12254** | B2 Lift decomp |
| **12256** | B3 Lift decomp |
| **12258** | B4 Lift decomp |
| **12260** | B5 Lift decomp |
| **12262** | B6 Lift decomp |
| **12264** | B7 Lift decomp |
| **12266** | B8 Lift decomp |
| **12268** | B9 Lift decomp |
| **12270** | B10 Lift decomp |

**12272** B11 Lift decomp
**12274** B12 Lift decomp
**12276** B13 Lift decomp
**12278** B14 Lift decomp
**12280** B15 Lift decomp

| Menu | PAR | Description | UM | Type | FB BIT | Def | Min | Max | Acc | Mod |
|---|---|---|---|---|---|---|---|---|---|---|
| **5.7.15** | **11250** | **Dcp3 mode command** | | BIT | | 0 | 0 | 1 | ERW | FVS |

Enabling of reading of commands from DCP3 serial protocol

**0** OFF
**1** ON

| Menu | PAR | Description | UM | Type | FB BIT | Def | Min | Max | Acc | Mod |
|---|---|---|---|---|---|---|---|---|---|---|
| **5.7.16** | **11252** | **Brake fbk A3 sel** | | ENUM | | 0 | - | - | RW | FVS |

Selection of the brake fault alarm In the default configuration the brake fault alarm function is disabled.

Setting of the source to enable:

**1110** Digit input E
**1210** Digit input 1x
**1212** Digit input 2x
**1214** Digit input 3x
**1216** Digit input 4x
**1218** Digit input 5x
**1220** Digit input 6x
**1222** Digit input 7x
**1224** Digit input 8x
**1226** Digit input 9x
**1228** Digit input 10x
**1230** Digit input 11x
**1232** Digit input 12x
**3702** Run cont mon
**3706** Down cont mon
**3708** Brake cont mon
**3714** Door open mon
**6000** Null
**6002** One
**12250** B0 Lift decomp
**12252** B1 Lift decomp
**12254** B2 Lift decomp
**12256** B3 Lift decomp
**12258** B4 Lift decomp
**12260** B5 Lift decomp
**12262** B6 Lift decomp
**12264** B7 Lift decomp
**12266** B8 Lift decomp
**12268** B9 Lift decomp
**12270** B10 Lift decomp
**12272** B11 Lift decomp
**12274** B12 Lift decomp
**12276** B13 Lift decomp
**12278** B14 Lift decomp
**12280** B15 Lift decomp
**13000** F0 Rising
**13001** F0 Falling
**13002** F1 Rising
**13003** F1 Falling

| Menu | PAR | Description | UM | Type | FB BIT | Def | Min | Max | Acc | Mod |
|---|---|---|---|---|---|---|---|---|---|---|
| **5.7.17** | **11256** | **SpeedRefSrc** | | ENUM | | 0 | 0 | 1 | RW | FVS |

Selection of the origin (source) of the signal to be used for the speed reference. The signals that can be used are multi-speed, analog inputs or fieldbus (except the PAR **4020 Fieldbus M->S1 ipa**)

| Menu | PAR | Description | UM | Type | FB BIT | Def | Min | Max | Acc | Mod |
|---|---|---|---|---|---|---|---|---|---|---|
| **5.7.18** | **11258** | **Lift EF alarm sel** | | ENUM | | 0 | 0 | 1 | RW | FVS |

Selection of the origin (source) of “Lift external fault”.

| Menu | PAR | Description | UM | Type | FB BIT | Def | Min | Max | Acc | Mod |
|---|---|---|---|---|---|---|---|---|---|---|
| **5.7.19** | **11272** | **Fast Enable sel** | | ENUM | | 1 | 0 | 1 | RW | FVS |

This parameter enables the Fast Enable command to digital Input 8. Entry to Digital Input 8 must be controlled by the controller. The enable should be completed with contactorless operation.

| Menu | PAR | Description | UM | Type | FB BIT | Def | Min | Max | Acc | Mod |
|---|---|---|---|---|---|---|---|---|---|---|
| **5.7.20** | **11274** | **Landing Cmd src** | | ENUM | | NULL | - | - | RW | FVS |

You can enable the Landing command with the Start signal as well as from Digital Inputs and Freeze inputs. If you select Freeze inputs, the command is activated on the encoder inputs (see the ADL300 Quick Start manual to identify the encode Freeze inputs).

Rising (rising/positive edge) means active on the rising edge of the signal; Falling (falling/negative edge) active on the falling edge.

| | |
|---|---|
| **1110** | Digit input E |
| **1210** | Digit input 1x |
| **1212** | Digit input 2x |
| **1214** | Digit input 3x |
| **1216** | Digit input 4x |
| **1218** | Digit input 5x |
| **1220** | Digit input 6x |
| **1222** | Digit input 7x |
| **1224** | Digit input 8x |
| **1226** | Digit input 9x |
| **1228** | Digit input 10x |
| **1230** | Digit input 11x |
| **1232** | Digit input 12x |
| **3702** | Run cont mon |
| **3706** | Down cont mon |
| **3708** | Brake cont mon |
| **3714** | Door open mon |
| **6000** | Null |
| **6002** | One |
| **12250** | B0 Lift decomp |
| **12252** | B1 Lift decomp |
| **12254** | B2 Lift decomp |
| **12256** | B3 Lift decomp |
| **12258** | B4 Lift decomp |
| **12260** | B5 Lift decomp |
| **12262** | B6 Lift decomp |
| **12264** | B7 Lift decomp |
| **12266** | B8 Lift decomp |
| **12268** | B9 Lift decomp |
| **12270** | B10 Lift decomp |
| **12272** | B11 Lift decomp |
| **12274** | B12 Lift decomp |
| **12276** | B13 Lift decomp |
| **12278** | B14 Lift decomp |
| **12280** | B15 Lift decomp |
| **13000** | F0 Rising |
| **13001** | F0 Falling |
| **13002** | F1 Rising |
| **13003** | F1 Falling |

| Menu | PAR | Description | UM | Type | FB BIT | Def | Min | Max | Acc | Mod |
|---|---|---|---|---|---|---|---|---|---|---|
| **5.7.21** | **12102** | **Command input mon** | | UINT32 | | 0 | | | ER | FVS |

The hexadecimal value of the input status is displayed, refer to the “lift control word” for a description of the meaning of each bit.

| Menu | PAR | Description | UM | Type | FB BIT | Def | Min | Max | Acc | Mod |
|---|---|---|---|---|---|---|---|---|---|---|
| **5.7.22** | **12104** | **Command output mon** | | UINT32 | | 0 | | | ER | FVS |

The hexadecimal value of the input status is displayed, refer to the “lift status word” for a description of the meaning of each bit.

## 5.8 –PRE - TORQUE

The Pre-torque function helps to guarantee a linear start without any initial acceleration. This is possible by setting a torque value that corresponds to the load before opening the brake. The value of the initial torque applied to the motor and the direction of the torque applied can be supplied by installing a load cell on the lift cabin. The load cell signal is acquired via the analog input and appropriately scaled if using the Pre-torque function.

If a load cell is not installed, a fixed torque value can be used, only supplying the direction of torque. In that case the fixed torque value is only optimised for one load condition.

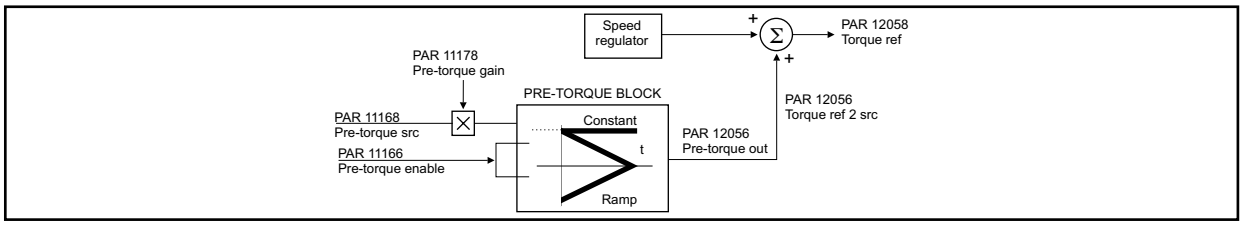


| Menu | PAR | Description | UM | Type | FB BIT | Def | Min | Max | Acc | Mod |
|---|---|---|---|---|---|---|---|---|---|---|
| **5.8.1** | **11166** | **Pre-torque enable** | | BIT | | 0 | 0 | 1 | RW | F |

Enabling of the pre-torque function

**0** OFF
**1** ON

| Menu | PAR | Description | UM | Type | FB BIT | Def | Min | Max | Acc | Mod |
|---|---|---|---|---|---|---|---|---|---|---|
| **5.8.2** | **11168** | **Pre-torque source** | | INT16 | | 11170 | 0 | 2 | RW | F |

Selection of the origin (source) of the signal used for the pre-torque function.

**1600** Analog inp 1
**1650** Analog inp 2
**4034** FieldbusM->S2
**4044** FieldbusM->S3
**4054** FieldbusM->S4
**4064** FieldbusM->S5
**4074** FieldbusM->S6
**4084** FieldbusM->S7
**4094** FieldbusM->S8
**4104** FieldbusM->S9
**4114** FieldbusM->S10
**4124** FieldbusM->S11
**4134** FieldbusM->S12
**4144** FieldbusM->S13
**4154** FieldbusM->S14
**4164** FieldbusM->S15
**4174** FieldbusM->S16
**11170** Int pretorque

| Menu | PAR | Description | UM | Type | FB BIT | Def | Min | Max | Acc | Mod |
|---|---|---|---|---|---|---|---|---|---|---|
| **5.8.3** | **11170** | **Init pre-torque** | | INT32 | | 1000 | | | RW | F |

Setting of the reference value used in the pre-torque function only if the Pre-torque source parameter is set to 0. The value set in this parameter only enables the pre-torque function to be optimised for one load condition. The pre-torque function can also be optimised for different load conditions by using the fieldbus to modify the setting of this parameter.

| Menu | PAR | Description | UM | Type | FB BIT | Def | Min | Max | Acc | Mod |
|---|---|---|---|---|---|---|---|---|---|---|
| **5.8.4** | **11172** | **Pre-torque ramp up** | ms | INT32 | | 0 | 0 | 10000 | RW | F |

Setting of the ramp time for the rising edge of the torque value (before opening the brake): if this parameter is set to zero the constant feed-forward torque value is maintained during travel.

| Menu | PAR | Description | UM | Type | FB BIT | Def | Min | Max | Acc | Mod |
|---|---|---|---|---|---|---|---|---|---|---|
| **5.8.5** | **11174** | **Pre-torque ramp down** | ms | INT32 | | 0 | 0 | 60000 | RW | F |

Setting of the ramp time for the falling edge of the torque value: if this parameter is set to zero the constant feed-forward torque value is maintained during travel.

| Menu | PAR | Description | UM | Type | FB BIT | Def | Min | Max | Acc | Mod |
|---|---|---|---|---|---|---|---|---|---|---|
| **5.8.6** | **11176** | **Pre-torque offset** | | FLOAT | | 0 | | | RW | F |

Setting of the offset value applied to the input reference of the pre-torque function.

| Menu | PAR | Description | UM | Type | FB BIT | Def | Min | Max | Acc | Mod |
|---|---|---|---|---|---|---|---|---|---|---|
| **5.8.7** | **11178** | **Pre torque gain** | | FLOAT | | 1 | | | RW | F |

Setting of the gain value used to convert the value applied to the analog input in the torque value to be used in the function. This gain is calculated automatically according to the weights and inertia values entered. Ideally, the reference must be set so that the minimum value corresponds to the empty cabin and the maximum value to the full load.

| Menu | PAR | Description | UM | Type | FB BIT | Def | Min | Max | Acc | Mod |
|---|---|---|---|---|---|---|---|---|---|---|
| **5.8.8** | **12040** | **Pre-torque input** | cnt | INT32 | | 0 | | | ER | F |

The reference value sampled at start is displayed.

| Menu | PAR | Description | UM | Type | FB BIT | Def | Min | Max | Acc | Mod |
|---|---|---|---|---|---|---|---|---|---|---|
| **5.8.9** | **12056** | **Pre-torque out** | cnt | INT32 | | 0 | | | ER | F |

The feed forward torque value output of the pre-torque function is displayed.

| Menu | PAR | Description | UM | Type | FB BIT | Def | Min | Max | Acc | Mod |
|---|---|---|---|---|---|---|---|---|---|---|
| **5.8.10** | **12058** | **Torque reference** | cnt | INT32 | | 0 | | | ER | F |

The torque reference value is displayed, given by the sum of the speed loop output and the torque feed forward.

## 5.9 – LIFT ALARMS

The MdPlc application for ADL300 manages and generates the following alarms:

| Alarm | Alarm type | Description |
|---|---|---|
| Plc1 fault | Cont feedback | Contactor feedback signal error |
| Plc2 fault | Brake feedback | Brake feedback signal error |
| Plc3 fault | Door feedback | Door feedback signal error |
| Plc4 fault | Brake Failure | The **Threshold A3** (PAR 11270) threshold has been overcome. |
| Plc5 fault | Not used | |
| Plc6 fault | Speed limited | Warning of speed limit to guarantee stop |
| Plc7 fault | Up/low limit | Speed limit exceeded in power factor regulation zone |
| Plc8 fault | Lift EF alarm sel | Associated to **Lift EF alarm sel** (PAR 11258) input |

All alarms are associated with a parameter to configure the action taken when the alarm is activated.
Activity: used to set the action to be performed after activation of the alarm, as follows.

| Action | |
|---|---|
| **Ignore** | The alarm is not included in the alarm list, it is not included in the alarm log, it is not signalled on the digital outputs, commands to the drive are not modified. |
| **Warning** | The alarm is included in the alarm list, it is included in the alarm log, it is signalled on the digital outputs, First alarm information is updated, Enabled alarms information is updated, commands to the drive are not modified. |
| **Disable** | The alarm is included in the alarm list, it is included in the alarm log, it is signalled on the digital outputs, First alarm information is updated, Enabled alarms information is updated, a stop command is sent, the motor is disabled and stops due to inertia. |
| **Fast Stop** | The alarm is included in the alarm list, it is included in the alarm log, it is signalled on the digital outputs, First alarm information is updated, Enabled alarms information is updated, a Stop command is sent. The drive is set to zero speed with the maximum available current; when the Speed 0 delay signal is activated the drive is disabled. |
| **Lift Fast stop** | When there is an alarm occurrence, lift will be stopped (ramp reference is set to zero) immediately with fast ramp, after that it will remain in alarm state. Attention: this will cause the cabin to stop out of floor ! |
| **Lift stop** | When there is an alarm occurrence, lift will continue to run until next stop condition, after that it will remain in alarm state. |

| Menu | PAR | Description | UM | Type | FB BIT | Def | Min | Max | Acc | Mod |
|---|---|---|---|---|---|---|---|---|---|---|
| **5.9.1** | **11058** | **Lift fast stop fact** | | FLOAT | | 10.00 | 1.00 | 50.00 | RW | FVS |

This parameter is applied to all ramps when a “Quick stop” alarm occurs.
The default setting is 10 = 1000% (standard ramps multiplied by 10).
To use standard ramps with no multiplication, set 1 = 100%.

| Menu | PAR | Description | UM | Type | FB BIT | Def | Min | Max | Acc | Mod |
|---|---|---|---|---|---|---|---|---|---|---|
| **5.9.2** | **11200** | **Contactor activity** | | INT16 | | 1 | 0 | 5 | RW | FVS |

Setting of drive behaviour in case of a Cont fbk fail alarm. This alarm indicates that the feedback confirming closing of the contactor has not been received.

**0** Ignore
**1** Warning
**2** Disable
**3** Fast Stop
**4** Lift Fast stop
**5** Lift stop

| Menu | PAR | Description | UM | Type | FB BIT | Def | Min | Max | Acc | Mod |
|---|---|---|---|---|---|---|---|---|---|---|
| **5.9.3** | **11202** | **Cont hold off** | ms | INT32 | | 3000 | | | RW | FVS |

Setting of the delay time between activation of the Cont fbk fail alarm condition signal and the actual alarm. In case of an alarm condition, the drive waits for the set time to elapse before activating the alarm. If the alarm is removed within the set time, the drive will not activate the alarm.

| Menu | PAR | Description | UM | Type | FB BIT | Def | Min | Max | Acc | Mod |
|---|---|---|---|---|---|---|---|---|---|---|
| **5.9.4** | **11204** | **Brake activity** | | INT16 | | 1 | 0 | 5 | RW | FVS |

Setting of drive behaviour in case of a Brake fbk fail alarm. This alarm indicates that the feedback confirming opening/closing of the brake has not been received.

**0** Ignore
**1** Warning
**2** Disable
**3** Fast Stop
**4** Lift Fast stop
**5** Lift stop

| Menu | PAR | Description | UM | Type | FB BIT | Def | Min | Max | Acc | Mod |
|---|---|---|---|---|---|---|---|---|---|---|
| **5.9.5** | **11206** | **Brake hold off** | ms | INT32 | | 3000.00 | | | RW | FVS |

Setting of the delay time between activation of the Brake fbk fail alarm condition signal and the actual alarm. In case of an alarm condition, the drive waits for the set time to elapse before activating the alarm. If the alarm is removed within the set time, the drive will not activate the alarm.

| Menu | PAR | Description | UM | Type | FB BIT | Def | Min | Max | Acc | Mod |
|---|---|---|---|---|---|---|---|---|---|---|
| **5.9.6** | **11208** | **Brake run hold off** | | INT16 | | 1 | 0 | 1 | RW | FVS |

Setting of drive behaviour when a possible Brake fbk fail alarm is detected.

**0** Disable
**1** Enable

If set to 0 the brake feedback alarm is indicated immediately

If set to 1 the possible brake feedback alarm is indicated at the end of travel: this allows the cabin to reach the floor in case of a faulty brake status signal.

| Menu | PAR | Description | UM | Type | FB BIT | Def | Min | Max | Acc | Mod |
|---|---|---|---|---|---|---|---|---|---|---|
| **5.9.7** | **11210** | **Door activity** | | INT16 | | 1 | 0 | 5 | RW | FVS |

Setting of drive behaviour in case of a **Door fbk fail** alarm. This alarm indicates that the feedback confirming opening of the door has not been received.

**0** Ignore
**1** Warning
**2** Disable
**3** Fast Stop
**4** Lift Fast stop
**5** Lift stop

| Menu | PAR | Description | UM | Type | FB BIT | Def | Min | Max | Acc | Mod |
|---|---|---|---|---|---|---|---|---|---|---|
| **5.9.8** | **11212** | **Door hold off** | ms | INT32 | | 1000 | | | RW | FVS |

Setting of the delay time between activation of the **Door fbk fai**l alarm condition signal and the actual alarm. In case of an alarm condition, the drive waits for the set time to elapse before activating the alarm. If the alarm is removed within the set time, the drive will not activate the alarm.

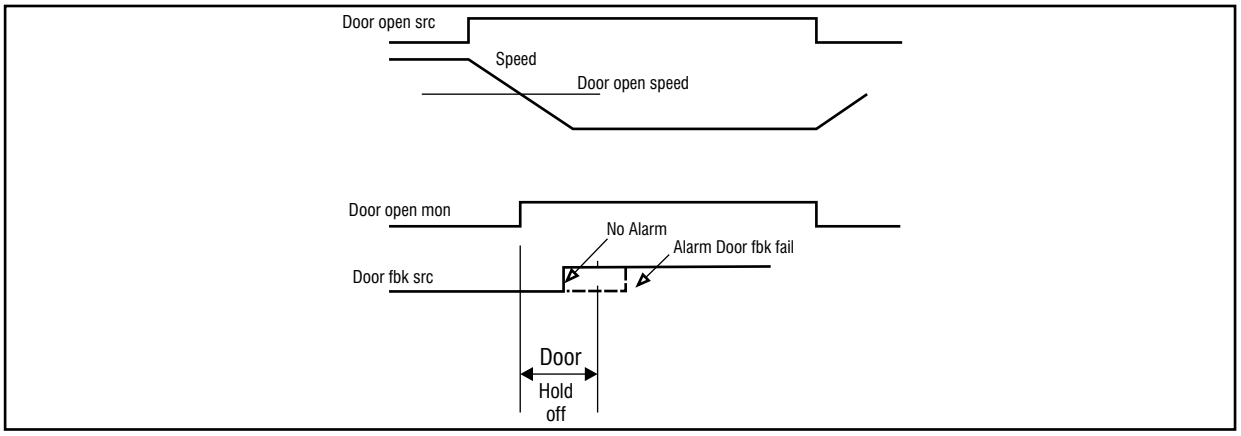


| Menu | PAR | Description | UM | Type | FB BIT | Def | Min | Max | Acc | Mod |
|---|---|---|---|---|---|---|---|---|---|---|
| **5.9.9** | **11214** | **Limit activity** | | INT16 | | 5 | 0 | 5 | RW | FVS |

Setting of drive behaviour in case of the **Upper/Lower limit**. This alarm occours when the speed is greather than PAR 11216 **Limit speed thr** and are active sensors installed at the beginning and end of the space. This function implemented in the drive provides an additional control to avoid overtravel.

The alarm condition is generated, when the set speed limit is exceeded.

The UpperLimit or LowerLimit inputs must be set to enable speed limit control. The **UpperLimit** must always correspond to the upper limit signal and the **LowerLimit** must always correspond to the lower limit signal.

**0** Ignore
**1** Warning
**2** Disable
**3** Fast Stop
**4** Lift Fast stop
**5** Lift stop

| Menu | PAR | Description | UM | Type | FB BIT | Def | Min | Max | Acc | Mod |
|---|---|---|---|---|---|---|---|---|---|---|
| **5.9.10** | **11216** | **Limit speed thr** | ms | INT32 | | 1.000 | | | RW | FVS |

Setting of the speed threshold in the upper or lower limit zone.

| Menu | PAR | Description | UM | Type | FB BIT | Def | Min | Max | Acc | Mod |
|---|---|---|---|---|---|---|---|---|---|---|
| **5.9.11** | **11218** | **Spd target activity** | | INT16 | | 1 | 0 | 5 | RW | FVS |

Setting of drive behaviour in case of the **Speed limit** alarm. This alarm is activated if, using the EFC function, the slow down distance is less than the real deceleration distance, thus enabling the speed limiter to ensure correct stopping.

**0** Ignore
**1** Warning
**2** Disable
**3** Fast Stop
**4** Lift Fast stop
**5** Lift stop

| Menu | PAR | Description | UM | Type | FB BIT | Def | Min | Max | Acc | Mod |
|---|---|---|---|---|---|---|---|---|---|---|
| **5.9.12** | **11264** | **Lift EF al activity** | | ENUM | | 5 | 0 | 5 | RW | FVS |

Setting of the “Lift external fault” alarm.
**0** Ignore
**1** Warning
**2** Disable
**3** Fast Stop
**4** Lift Fast stop
**5** Lift stop

| Menu | PAR | Description | UM | Type | FB BIT | Def | Min | Max | Acc | Mod |
|---|---|---|---|---|---|---|---|---|---|---|
| **5.9.13** | **11266** | **Lift EF hold off** | ms | LONG | | 1000 | 0 | 60000 | RW | FVS |

Maintaining the “Lift external fault” alarm.

“Lift EF” is displayed when a “Lift external fault” alarm occurs.

| Menu | PAR | Description | UM | Type | FB BIT | Def | Min | Max | Acc | Mod |
|---|---|---|---|---|---|---|---|---|---|---|
| **5.9.14** | **11268** | **Reset Brake Alarm** | | Short | | 0 | - | - | RW | FVS |

Resets the **Brake Alarm**.

1. Open menu 5.9 LIFT ALARMS, and check that the **Brake Alarm** is on.
2. In the lift alarm menu, select parameter 11268 **Reset Brake Alarm** (default 0).
3. The system asks for a code, enter release code 5313.
4. Check again to see whether the **Brake Alarm** has been reset.

| Menu | PAR | Description | UM | Type | FB BIT | Def | Min | Max | Acc | Mod |
|---|---|---|---|---|---|---|---|---|---|---|
| **5.9.15** | **11270** | **Threshold A3** | | Float | | 0.100 | 0.000 | 2.000 | RW | FVS |

When the brake is connected, the **Brake** fault alarm is activated if the movement (in metres) is more than the value set in parameter 11270 **Threshold A3**.

## 6 -

## 7 -

## 8 -

## 9 -

**Note !** These menues are not available.

# 10 - DIGITAL INPUTS

| Menu | PAR | Description | UM | Type | FB BIT | Def | Min | Max | Acc | Mod |
|---|---|---|---|---|---|---|---|---|---|---|
| **10.01** | **1240** | **Dig inp 1X inversion** | | | BIT | 0 | 0 | 1 | ERW | FVS |
| **10.02** | **1242** | **Dig inp 2X inversion** | | | BIT | 0 | 0 | 1 | ERW | FVS |
| **10.03** | **1244** | **Dig inp 3X inversion** | | | BIT | 0 | 0 | 1 | ERW | FVS |
| **10.04** | **1246** | **Dig inp 4X inversion** | | | BIT | 0 | 0 | 1 | ERW | FVS |
| **10.05** | **1248** | **Dig inp 5X inversion** | | | BIT | 0 | 0 | 1 | ERW | FVS |
| **10.06** | **1250** | **Dig inp 6X inversion** | | | BIT | 0 | 0 | 1 | ERW | FVS |
| **10.07** | **1252** | **Dig inp 7X inversion** | | | BIT | 0 | 0 | 1 | ERW | FVS |
| **10.08** | **1254** | **Dig inp 8X inversion** | | | BIT | 0 | 0 | 1 | ERW | FVS |
| **10.09** | **1256** | **Dig inp 9X inversion** | | | BIT | 0 | 0 | 1 | ERW | FVS |
| **10.10** | **1258** | **Dig inp 10X inversion** | | | BIT | 0 | 0 | 1 | ERW | FVS |
| **10.11** | **1260** | **Dig inp 11X inversion** | | | BIT | 0 | 0 | 1 | ERW | FVS |
| **10.12** | **1262** | **Dig inp 12X inversion** | | | BIT | 0 | 0 | 1 | ERW | FVS |

Inversion of the logic status of the function associated with the digital input of the expansion card.

**0** Off
**1** On

**Note !** The parameters **Dig inp 9X inversion ... Dig inp 12X inversion** are available only in the ADL300A version with a specific expansion card. See the ADL300 QS manual.

| Menu | PAR | Description | UM | Type | FB BIT | Def | Min | Max | Acc | Mod |
|---|---|---|---|---|---|---|---|---|---|---|
| **10.13** | **1268** | **Dig input E dest** | | | ILINK | 0 | 0 | 0 | ER | FVS |
| **10.14** | **1270** | **Dig input 1X dest** | | | ILINK | 0 | 0 | 0 | ER | FVS |
| **10.15** | **1272** | **Dig input 2X dest** | | | ILINK | 0 | 0 | 0 | ER | FVS |
| **10.16** | **1274** | **Dig input 3X dest** | | | ILINK | 0 | 0 | 0 | ER | FVS |
| **10.17** | **1276** | **Dig input 4X dest** | | | ILINK | 0 | 0 | 0 | ER | FVS |
| **10.18** | **1278** | **Dig input 5X dest** | | | ILINK | 0 | 0 | 0 | ER | FVS |
| **10.19** | **1280** | **Dig input 6X dest** | | | ILINK | 0 | 0 | 0 | ER | FVS |
| **10.20** | **1282** | **Dig input 7X dest** | | | ILINK | 0 | 0 | 0 | ER | FVS |
| **10.21** | **1284** | **Dig input 8X dest** | | | ILINK | 0 | 0 | 0 | ER | FVS |
| **10.22** | **1286** | **Dig input 9X dest** | | | ILINK | 0 | 0 | 0 | ER | FVS |
| **10.23** | **1288** | **Dig input 10X dest** | | | ILINK | 0 | 0 | 0 | ER | FVS |
| **10.24** | **1290** | **Dig input 11X dest** | | | ILINK | 0 | 0 | 0 | ER | FVS |
| **10.25** | **1292** | **Dig input 12X dest** | | | ILINK | 0 | 0 | 0 | ER | FVS |

Selection of the destination of the digital input of the associated expansion card.

**Note !** The parameters **Dig input 9X dest ... Dig input 12X dest** are available only in the ADL300A version with a specific expansion card. See the ADL300 QS manual.

# 11 - DIGITAL OUTPUTS

| Menu | PAR | Description | UM | Type | FB BIT | Def | Min | Max | Acc | Mod |
|---|---|---|---|---|---|---|---|---|---|---|
| **11.01** | **1410** | **Dig output 1X src** | | LINK | 16BIT | 1062 | 0 | 16384 | ERW | FVS |
| **11.02** | **1412** | **Dig output 2X src** | | LINK | 16BIT | 3708 | 0 | 16384 | ERW | FVS |
| **11.03** | **1414** | **Dig output 3X src** | | LINK | 16BIT | 3702 | 0 | 16384 | ERW | FVS |
| **11.04** | **1416** | **Dig output 4X src** | | LINK | 16BIT | 3714 | 0 | 16384 | ERW | FVS |
| **11.05** | **1418** | **Dig output 5X src** | | LINK | 16BIT | 1062 | 0 | 16384 | ERW | FVS |
| **11.06** | **1420** | **Dig output 6X src** | | LINK | 16BIT | 3708 | 0 | 16384 | ERW | FVS |
| **11.07** | **1422** | **Dig output 7X src** | | LINK | 16BIT | 3702 | 0 | 16384 | ERW | FVS |
| **11.08** | **1424** | **Dig output 8X src** | | LINK | 16BIT | 3714 | 0 | 16384 | ERW | FVS |

The destination associated with the digital input of the expansion card is displayed. The functions that can be associated with the digital outputs are listed in the "**L_DIGSEL1**" selection list".

**Note !** The parameters **Dig output 5X src ... Dig output 8X src** are available only in the ADL300A version with a specific expansion card. See the ADL300 QS manual.

| Menu | PAR | Description | UM | Type | FB BIT | Def | Min | Max | Acc | Mod |
|---|---|---|---|---|---|---|---|---|---|---|
| **11.09** | **1430** | **Dig out 1X inversion** | | | BIT | 0 | 0 | 1 | ERW | FVS |
| **11.10** | **1432** | **Dig out 2X inversion** | | | BIT | 0 | 0 | 1 | ERW | FVS |
| **11.11** | **1434** | **Dig out 3X inversion** | | | BIT | 0 | 0 | 1 | ERW | FVS |
| **11.12** | **1436** | **Dig out 4X inversion** | | | BIT | 0 | 0 | 1 | ERW | FVS |
| **11.13** | **1438** | **Dig out 5X inversion** | | | BIT | 0 | 0 | 1 | ERW | FVS |
| **11.14** | **1440** | **Dig out 6X inversion** | | | BIT | 0 | 0 | 1 | ERW | FVS |
| **11.15** | **1442** | **Dig out 7X inversion** | | | BIT | 0 | 0 | 1 | ERW | FVS |
| **11.16** | **1444** | **Dig out 8X inversion** | | | BIT | 0 | 0 | 1 | ERW | FVS |

Inversion of the logic status of the function associated with the digital output of the expansion card.

**0** Off
**1** On

**Note !** The parameters **Dig out 5X inversion ... Dig out 8X inversion** are available only in the ADL300A version with a specific expansion card. See the ADL300 QS manual.

# 12 - ANALOG INPUTS

**Note !** These parameters are only available with cards provided with analog inputs.

| Menu | PAR | Description | UM | Type | FB BIT | Def | Min | Max | Acc | Mod |
|---|---|---|---|---|---|---|---|---|---|---|
| **12.1** | **1600** | **Analog input 1X mon** | cnt | INT16 | 16/32BIT | 0 | 0 | 0 | ER | FVS |
| **12.13** | **1650** | **Analog input 2X mon** | cnt | INT16 | 16/32BIT | 0 | 0 | 0 | ER | FVS |

The value of the voltage on the output of the function block of the relative analog input is displayed.

| Menu | PAR | Description | UM | Type | FB BIT | Def | Min | Max | Acc | Mod |
|---|---|---|---|---|---|---|---|---|---|---|
| **12.2** | **1602** | **Analog inp 1X type** | | ENUM | | -10V..+10V | 0 | 2 | ERW | FVS |
| **12.14** | **1652** | **Analog inp 2X type** | | ENUM | | -10V..+10V | 0 | 2 | ERW | FVS |

Selection of the type of input (voltage or current). Depending on the input signal, move the switches on the regulation card. The factory parameter is inputs set for differential voltage signals (± 10V).

**0** -10V..+10V
**1** 0.20mA , 0.10V
**2** 4..20mA

Select option **0** in order to connect a maximum voltage of ±12.5V (typically ±10V/5mA) to the analog input concerned. If the signal is used as a reference, reverse the direction of rotation by inverting the voltage polarity.

Select option 1 to connect a max voltage of 12.5V (typically 10V/5mA) or a signal in current from 0 ... 20 mA to the analog input concerned. The signal must be positive.

Select option 2 to connect a current signal of 4...20 mA to the analog input concerned. The signal must be positive.

| Menu | PAR | Description | UM | Type | FB BIT | Def | Min | Max | Acc | Mod |
|---|---|---|---|---|---|---|---|---|---|---|
| **12.3** | **1604** | **Analog inp 1X scale** | | | FLOAT | 1.0 | -10.0 | 10.0 | ERW | FVS |
| **12.15** | **1654** | **Analog inp 2X scale** | | | FLOAT | 1.0 | -10.0 | 10.0 | ERW | FVS |

Setting of a multiplier factor to be applied to the relative analog input of the expansion card.

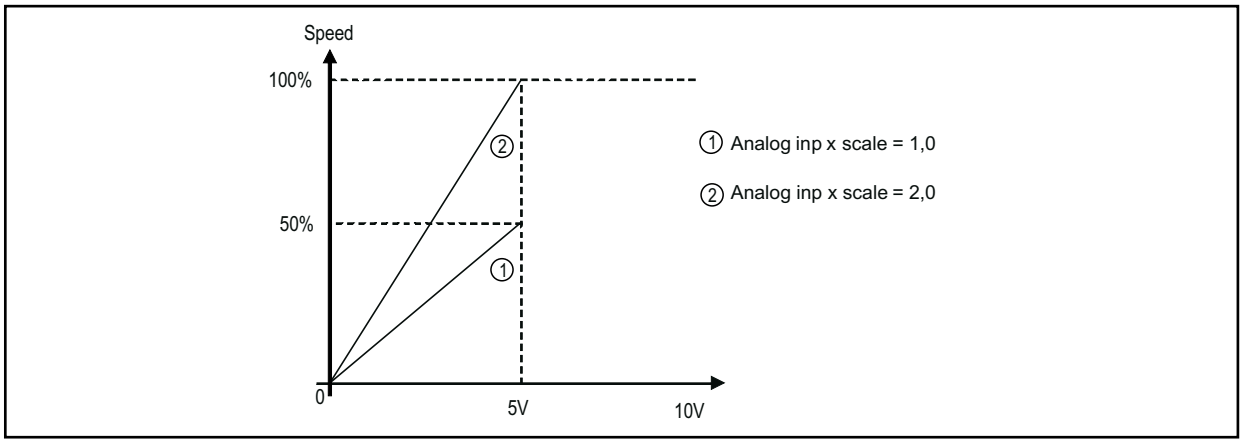


Example :

The speed reference of a drive is assigned with a max external voltage of 5V. With this value the drive must reach the maximum speed allowed (set using **Full scale speed**).

As the **Analog inp XX scale** parameter the scale factor of 2 is entered (10V : 5V)

| Menu | PAR | Description | UM | Type | FB BIT | Def | Min | Max | Acc | Mod |
|---|---|---|---|---|---|---|---|---|---|---|
| **12.4** | **1606** | **An inp 1Xoffset tune** | | | BIT | 0 | 0 | 1 | ERW | FVS |
| **12.16** | **1656** | **An inp 2Xoffset tune** | | | BIT | 0 | 0 | 1 | ERW | FVS |

Self-tuning command for the offset of the relative analog input of the expansion card. Automatic fine tuning of the input. To perform self-tuning, set the input signal to its minimum value and execute the command. The conditions containing an offset can be compensated. When this command is sent, **An inp xX offset tune** is automatically selected so that the available input signal corresponds to the zero value of the variable.

Automatic tuning can only be performed if the following condition is present:
- Input voltage less than 1V or input current less than 2 mA

**NOTE!** The value that is obtained automatically can be changed manually, if necessary, using **An inp offset xX**.

If the voltage setting on the analog input is more than 1V the “Input value too high” message is displayed.

| Menu | PAR | Description | UM | Type | FB BIT | Def | Min | Max | Acc | Mod |
|---|---|---|---|---|---|---|---|---|---|---|
| **12.5** | **1608** | **An inp 1X gain tune** | | | BIT | 0 | 0 | 1 | ERW | FVS |
| **12.17** | **1658** | **An inp 2X gain tune** | | | BIT | 0 | 0 | 1 | ERW | FVS |

Self-tuning command for the relative analog input gain. Automatic fine tuning of the input. When this command is sent, **An inp XX gain tune** is automatically selected so that the available input signal corresponds to the maximum value of the variable.

Two conditions are necessary in order to perform automatic tuning:
- Input voltage greater than 1V or input current greater than 2 mA
- Positive polarity. The value that is found is automatically accepted for the other direction of rotation.

**Note!** If necessary, the value obtained automatically can be changed manually via **An inp XX gain tune**.

To perform self-tuning, set the input signal to its maximum value and execute the command. A multiplier factor is calculated to apply to the input signal value (not considering the Analog inp scale parameter) to reach the full scale value.

If the voltage setting on the analog input is less than 1V the “Input value too low” message is displayed.

| Menu | PAR | Description | UM | Type | FB BIT | Def | Min | Max | Acc | Mod |
|---|---|---|---|---|---|---|---|---|---|---|
| **12.6** | **1610** | **Analog inp 1X filter** | ms | | UINT16 | 10 | 2 | 100 | ERW | FVS |
| **12.18** | **1660** | **Analog inp 2X filter** | ms | | UINT16 | 10 | 2 | 100 | ERW | FVS |

Filter on the measurement of the corresponding analog input. This parameter can be used to control the response of the analog input and reduce any possible noise and interference.

| Menu | PAR | Description | UM | Type | FB BIT | Def | Min | Max | Acc | Mod |
|---|---|---|---|---|---|---|---|---|---|---|
| **12.7** | **1612** | **Analog inp 1X top** | cnt | | INT16 | 16384 | -32768 | +32767 | ERW | FVS |
| **12.19** | **1662** | **Analog inp 2X top** | cnt | | INT16 | 16384 | -32768 | +32767 | ERW | FVS |

Setting of the upper speed reference limit as a function of the voltage (or current) of the relative analog reference of the expansion card.

| Menu | PAR | Description | UM | Type | FB BIT | Def | Min | Max | Acc | Mod |
|---|---|---|---|---|---|---|---|---|---|---|
| **12.8** | **1614** | **Analog inp 1X bottom** | cnt | | INT16 | -16384 | -32768 | +32767 | ERW | FVS |
| **12.20** | **1664** | **Analog inp 2X bottom** | cnt | | INT16 | -16384 | -32768 | +32767 | ERW | FVS |

Setting of the lower speed reference limit as a function of the voltage (or current) of the relative analog reference of the expansion card.

| Menu | PAR | Description | UM | Type | FB BIT | Def | Min | Max | Acc | Mod |
|---|---|---|---|---|---|---|---|---|---|---|
| **12.9** | **1616** | **Analog inp 1X offset** | cnt | | INT16 | 0 | -32768 | +32767 | ERW | FVS |
| **12.21** | **1666** | **Analog inp 2X offset** | cnt | | INT16 | 0 | -32768 | +32767 | ERW | FVS |

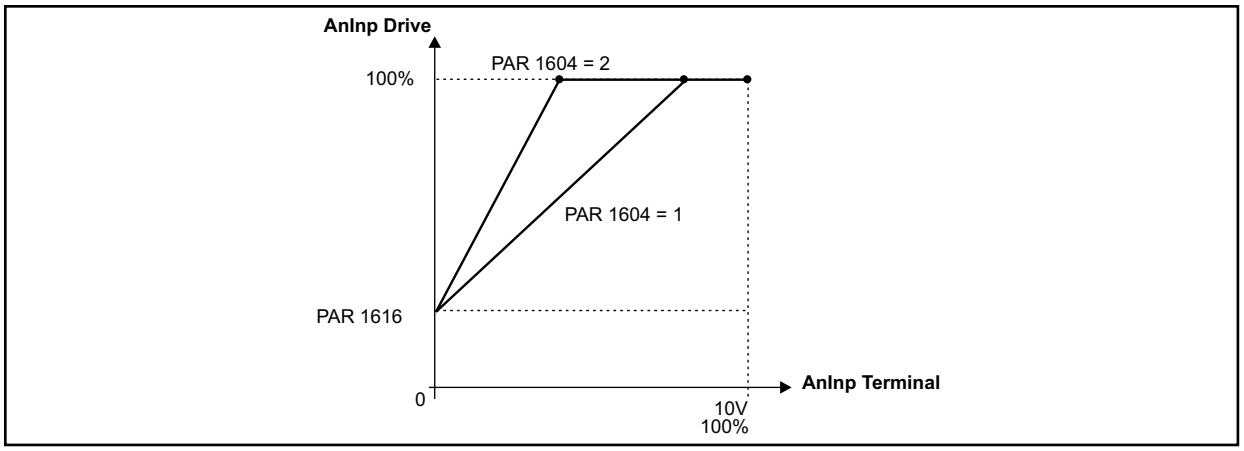


Setting of an offset value to algebrically add to the relative analog input of the expansion card.

| Menu | PAR | Description | UM | Type | FB BIT | Def | Min | Max | Acc | Mod |
|---|---|---|---|---|---|---|---|---|---|---|
| **12.10** | **1618** | **Analog inp 1X gain** | | | FLOAT | 1.0 | -10.0 | 10.0 | ERW | FVS |
| **12.22** | **1668** | **Analog inp 2X gain** | | | FLOAT | 1.0 | -10.0 | 10.0 | ERW | FVS |

This parameter contains the value of the multiplier factor to apply to the analog reference of the expansion card calculated using the **Analog inp gain tune** function.

Example :

An external analog reference only reaches a maximum of 9.8V instead of 10V. 1.020 (10V : 9.8V) is entered as the **Analog inp x gain** parameter.

The same result can be achieved using the **Analog inp x gain tune** function. This parameter can be selected from the keypad menu. The maximum analog value available (in this case 9.8V) must be present on the terminal, with positive polarity. Press the **Enter** key on the keypad to start analog reference self-tuning.

| Menu | PAR | Description | UM | Type | FB BIT | Def | Min | Max | Acc | Mod |
|---|---|---|---|---|---|---|---|---|---|---|
| **12.11** | **1626** | **An inp 1X sign src** | | LINK | 16BIT | 6000 | 0 | 16384 | ERW | FVS |
| **12.23** | **1676** | **An inp 2X sign src** | | LINK | 16BIT | 6000 | 0 | 16384 | ERW | FVS |

Selection of the origin (source) of the signal to be assigned to the relative digital input of the expansion card for selecting the direction of rotation of the motor. The functions that can be associated with the digital outputs are listed in the "**L_DIG-SEL2**" selection list".

| Menu | PAR | Description | UM | Type | FB BIT | Def | Min | Max | Acc | Mod |
|---|---|---|---|---|---|---|---|---|---|---|
| **12.12** | **1632** | **Analog input 1X dest** | | ILINK | | 0 | 0 | 0 | ER | FVS |
| **12.24** | **1682** | **Analog input 2X dest** | | ILINK | | 0 | 0 | 0 | ER | FVS |

The function for which the relative analog input of the expansion card has been programmed and on which it acts is displayed.

# 13 - ANALOG OUTPUTS

There can be two programmable analog outputs, depending on the configuration.

Analog output 1 supplies a two-pole +/-10VDC voltage signal, while analog output 2 can be programmed to obtain a 0-20mA or 4-20mA output signal in current or a signal in two-pole +/-10VDC voltage, depending on the parameter assigned.

**Note !** These parameters are only available with cards provided with analog outputs.

| Menu | PAR | Description | UM | Type | FB BIT | Def | Min | Max | Acc | Mod |
|---|---|---|---|---|---|---|---|---|---|---|
| **13.1** | **1850** | **Analog out 1X src** | | LINK | 16/32BIT | 6000 | 0 | 16384 | ERW | FVS |
| **13.2** | **1852** | **Analog out 2X src** | | LINK | 16/32BIT | 6000 | 0 | 16384 | ERW | FVS |

Selection of the origin (source) of the signals that can be placed as variables on the analog outputs of the expansion card. The functions that can be assigned to the analog outputs are listed in the "**L_ANOUT**" selection list".

| Menu | PAR | Description | UM | Type | FB BIT | Def | Min | Max | Acc | Mod |
|---|---|---|---|---|---|---|---|---|---|---|
| **13.3** | **1858** | **Analog out 1X scale** | | FLOAT | | 1.0 | -10.0 | 10.0 | ERW | FVS |
| **13.4** | **1860** | **Analog out 2X scale** | | FLOAT | | 1.0 | -10.0 | 10.0 | ERW | FVS |

Parameter for setting a multiplier factor of the signal of the relative analog output of the expansion card. It can be used to amplify or reduce the input value of the relative analog output block.

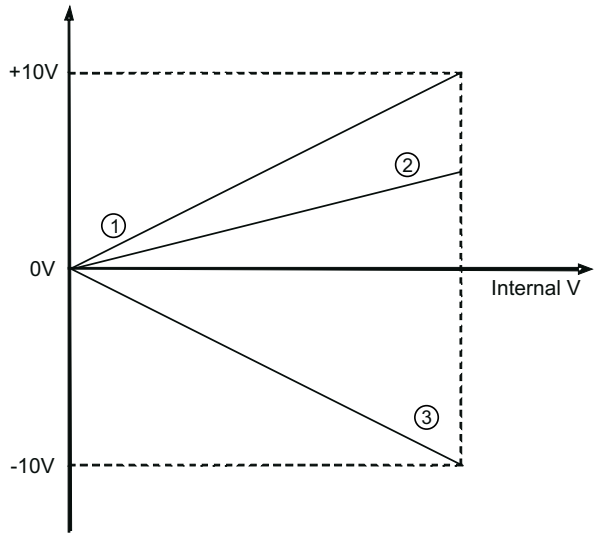


① Par. 1856 (1860) = 1

② Par. 1856 (1860) = 0,5

③ Par. 1856 (1860) = -1

$$Vout = 10 \times \left( \frac{\text{Stp Var x par. 1858 (1860)}}{\text{FS Var}} \right)$$

**Vout** output voltage on the card terminals.

**Stp Var** actual value of the variable (variable unit)

**FS Var** full scale of the variable (variable unit)

Example of calculation of the **Analog out Xx scale factor**

To display the drive speed, use an analog instrument with field of measurement from 0 ... 2V. This means that, to display the speed of the drive, a voltage of 2V on the analog output of the drive must correspond to the maximum speed. With a scale factor of 1 this would be 10V (Scale factor = 2V / 10 V = 0.200).

| Menu | PAR | Description | UM | Type | FB BIT | Def | Min | Max | Acc | Mod |
|---|---|---|---|---|---|---|---|---|---|---|
| **13.5** | **1866** | **Analog out 1X mon** | cnt | | INT16 | 0 | 0 | 0 | ER | FVS |

The actual value of the voltage present on analog output 1 of the expansion card is displayed.

| Menu | PAR | Description | UM | Type | FB BIT | Def | Min | Max | Acc | Mod |
|---|---|---|---|---|---|---|---|---|---|---|
| **13.6** | **1868** | **Analog out 2X mon** | cnt | | INT16 | 0 | 0 | 0 | ER | FVS |

The actual value of the voltage or current present on analog output 2 of the expansion card is displayed.

| Menu | PAR | Description | UM | Type | FB BIT | Def | Min | Max | Acc | Mod |
|---|---|---|---|---|---|---|---|---|---|---|
| **13.7** | **1874** | **An out 1X absolute** | | ENUM | INT16 | Disable | 0 | 1 | ERW | FVS |
| **13.8** | **1876** | **An out 2X absolute** | | ENUM | INT16 | Disable | 0 | 1 | ERW | FVS |

Enables the relative analog output as an absolute value. If this parameter is set to 1 the voltage on the analog output assumes the value of 0...10V regardless of the sign of the command signal.

**0** Disable
**1** Enable

| Menu | PAR | Description | UM | Type | FB BIT | Def | Min | Max | Acc | Mod |
|---|---|---|---|---|---|---|---|---|---|---|
| **13.9** | **1882** | **Analog out 1X min** | cnt | INT16 | | -16384 | -32768 | +32767 | ERW | FVS |
| **13.10** | **1884** | **Analog out 1X max** | cnt | INT16 | | -16384 | -32768 | +32767 | ERW | FVS |

Setting of the minimum and maximum values for the analog output for the voltage present on analog output 1 of the expansion card.

| Menu | PAR | Description | UM | Type | FB BIT | Def | Min | Max | Acc | Mod |
|---|---|---|---|---|---|---|---|---|---|---|
| **13.11** | **1890** | **Analog out 2X min** | cnt | INT16 | | -16384 | -32768 | +32767 | ERW | FVS |
| **13.12** | **1892** | **Analog out 2X max** | cnt | INT16 | | 16384 | -32768 | +32767 | ERW | FVS |

Setting of the minimum and maximum values for the analog output in current or voltage present on analog output 2 of the expansion card.

| Menu | PAR | Description | UM | Type | FB BIT | Def | Min | Max | Acc | Mod |
|---|---|---|---|---|---|---|---|---|---|---|
| **13.13** | **1898** | **Analog out 2X type** | | ENUM | | -10V..+10V | 0 | 2 | ERW | FVS |

Selection of the programmed signal on analog output 2 of the expansion card. The standard output is coded for the signal in voltage.

**0** 0..20mA
**1** 4..20mA
**2** -10V..+10V

Select option 0 to apply a signal in current of 0 ... 20 mA to analog output 2. The signal must be positive.

Select option 1 to apply a signal in current of 4...20 mA to analog output 2.

Select option 2 to apply a maximum voltage of ±12.5V (typically ±10V/5mA) to analog output 2.

# 14 - MOTOR DATA

From this menu you can enter the motor plate data and “basic” values for the voltage/frequency characteristics. It is important to enter the correct data in order to optimize drive operation and that of the application as a whole. These data are required in order to obtain:

a) Computation of the normalization factors necessary for regulation

b) Computation of the estimated values for the motor parameters necessary for regulation

Rated voltage, Rated speed, Rated frequency, Rated current, Cos phi, Basic voltage and Basic frequency must be entered (the Cos phi default value can be used if this value it not present on the plate). After entering these parameters, send a **Take parameters** command to calculate (a) and (b) above. The motor cannot be enabled until the **Take parameters** command has been set. If some results are inconsistent, or if the motor is much smaller than the inverter, an error message is displayed indicating a numerical capacity overflow and the previous set of parameters is restored in the **“Mot plate data”** sub-menu.

Example of kW and HP motor data plates

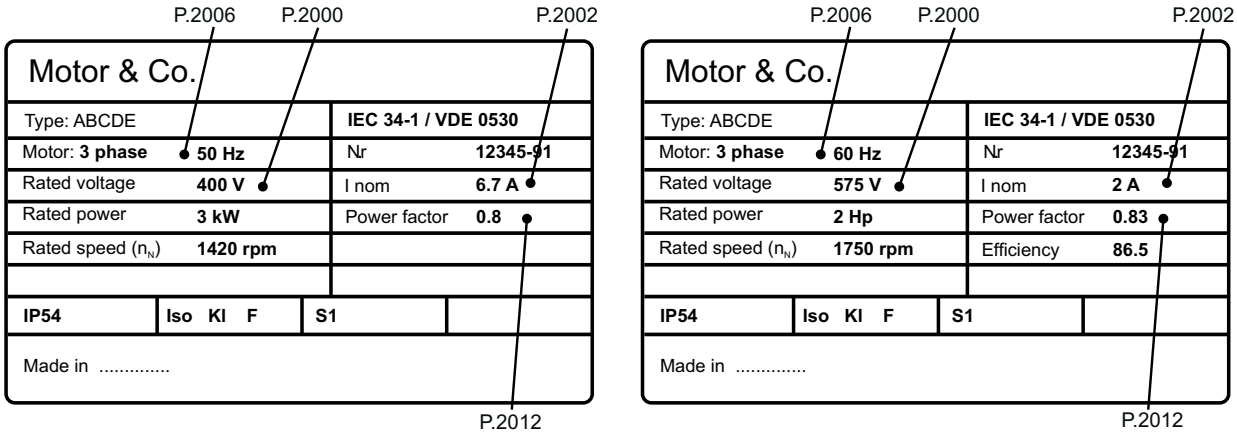


| Menu | PAR | Description | UM | Type | FB BIT | Def | Min | Max | Acc | Mod |
|---|---|---|---|---|---|---|---|---|---|---|
| **14.1** | **2000** | **Rated voltage** | V | FLOAT | | SIZE | 50.0 | 690.0 | RWZS | FVS |

Set the motor rated voltage as indicated on the data plate. This is the voltage the drive must supply at the motor rated frequency.

| Menu | PAR | Description | UM | Type | FB BIT | Def | Min | Max | Acc | Mod |
|---|---|---|---|---|---|---|---|---|---|---|
| **14.2** | **2002** | **Rated current** | A | FLOAT | | SIZE | 1.0 | 1500.0 | RWZS | FVS |

he motor rated current at its rated power (kW / Hp) and voltage (indicated on the motor data plate).

If using a single drive to control several motors connected in parallel (only possible in the SSC mode), enter a value that corresponds to the sum of the rated currents of all the motors; in this case do not perform any “self-tuning operations”.

| Menu | PAR | Description | UM | Type | FB BIT | Def | Min | Max | Acc | Mod |
|---|---|---|---|---|---|---|---|---|---|---|
| **14.3** | **2004** | **Rated speed** | rpm | FLOAT | | SIZE | 10.0 | 32000.0 | RWZS | FVS |

Rated speed of the motor with full load in rpm (rpm = m-1). In some motors the synchronous speed (e.g. 1500 rpm for a 4-pole motor) and slippage, i.e. the loss of revolutions between the motor idling condition and the rated load condition (e.g. 80 rpm), is indicated. Enter the following: synchronous speed - slippage.

| Menu | PAR | Description | UM | Type | FB BIT | Def | Min | Max | Acc | Mod |
|---|---|---|---|---|---|---|---|---|---|---|
| **14.4** | **2006** | **Rated frequency** | Hz | FLOAT | | SIZE | 10.0 | 1000.0 | RWZS | FVS |

Rated frequency of the motor expressed in Hz, at which the flux weakening range starts.

| Menu | PAR | Description | UM | Type | FB BIT | Def | Min | Max | Acc | Mod |
|---|---|---|---|---|---|---|---|---|---|---|
| **14.5** | **2008** | **Pole pairs** | | UINT16 | | SIZE | 1 | 20 | RWZS | FVS |

Motor pole pairs. The number of motor pole pairs is calculated using the motor plate data and applying the following formula:

$$p = \frac{60\ [s] \times f\ [Hz]}{nN\ [rpm]}$$

Where: p = motor pole pairs; f = motor rated frequency (PAR 2006)

nN = motor rated speed (PAR 2004)

| Menu | PAR | Description | UM | Type | FB BIT | Def | Min | Max | Acc | Mod |
|---|---|---|---|---|---|---|---|---|---|---|
| **14.6** | **2010** | **Rated power** | kW | FLOAT | | SIZE | 0.1 | 1500.0 | RWZS | FVS |

Rated power of the motor at the rated voltage and frequency. This value represents the mechanical power produced on the motor shaft.

| Menu | PAR | Description | UM | Type | FB BIT | Def | Min | Max | Acc | Mod |
|---|---|---|---|---|---|---|---|---|---|---|
| **14.7** | **2012** | **Rated power factor** | | FLOAT | | SIZE | 0.6 | 0.95 | RWZS | FVS |

Motor power factor, as indicated on the data plate (Cos j). This parameter is not always present on the motor data plate: in that case use the default value present in the drive.

| Menu | PAR | Description | UM | Type | FB BIT | Def | Min | Max | Acc | Mod |
|---|---|---|---|---|---|---|---|---|---|---|
| **14.8** | **2020** | **Take parameters** | | BIT | | 0 | 0 | 1 | RWZ | FVS |

Saves the set motor data in the drive. This command must be supplied last after entering the appropriate values of all the parameters listed above. This means calculating the normalization factors (a) and estimated values for the motor parameters (b). The drive cannot be started until the **Take parameters** command has been set.

| Menu | PAR | Description | UM | Type | FB BIT | Def | Min | Max | Acc | Mod |
|---|---|---|---|---|---|---|---|---|---|---|
| **14.9** | **2022** | **Autotune rotation** | | BIT | | 0 | 0 | 1 | RWZ | FVS |

Performs self-tuning in rotation: the motor must be uncoupled from the load or the transmission must not represent more than 5% of the load. This procedure allows the greatest degree of accuracy in measuring the motor parameters. To execute the command you must first open the hardware enabling contact between terminals 9 and DICM.

Selt-tuning can now be performed. At the end of the self-tuning procedure, open the contact between terminals 9 and DICM again and reset the parameters that were modified.

| Menu | PAR | Description | UM | Type | FB BIT | Def | Min | Max | Acc | Mod |
|---|---|---|---|---|---|---|---|---|---|---|
| **14.10** | **2024** | **Autotune still** | | BIT | | 0 | 0 | 1 | RWZ | FVS |

Performs self-tuning with the motor coupled to the transmission. The self-tuning procedure may cause limited rotation of the motor shaft. To perform self-tuning, follow the procedure described for the previous parameter.

| Menu | PAR | Description | UM | Type | FB BIT | Def | Min | Max | Acc | Mod |
|---|---|---|---|---|---|---|---|---|---|---|
| **14.11** | **2026** | **Autotune mode** | | ENUM | | Reduced | 0 | 1 | ERWZ | FVS |

Selection of the motor parameter self-tuning mode

**0** Reduced
**1** Extended

If set to **0** all the motor parameters are measured except those relating to the non-linear saturation curve. Use this mode to obtain a faster self-tuning procedure.

If set to **1** all the motor parameters are measured. Use this mode to obtain maximum efficiency: this procedure may take a few minutes.

| Menu | PAR | Description | UM | Type | FB BIT | Def | Min | Max | Acc | Mod |
|---|---|---|---|---|---|---|---|---|---|---|
| **14.12** | **2028** | **Take status** | | ENUM | | Required | 0 | 0 | R | FVS |

Indication of the status of parameter saving.

**0** Required
**1** Done

The parameter displays the **Required** message when the motor parameters that have been entered need to be saved. When they have been saved the parameter indicates **Done**.

| Menu | PAR | Description | UM | Type | FB BIT | Def | Min | Max | Acc | Mod |
|---|---|---|---|---|---|---|---|---|---|---|
| **14.13** | **2030** | **Autotune status** | | ENUM | | Required | 0 | 0 | R | FVS |

Indication of the status of execution of motor parameter self-tuning.

**0** Required
**1** Done

The parameter displays the **Required** message when motor parameter self-tuning is required. When self-tuning is complete the parameter indicates **Done**.

| Menu | PAR | Description | UM | Type | FB BIT | Def | Min | Max | Acc | Mod |
|---|---|---|---|---|---|---|---|---|---|---|
| **14.14** | **2050** | **Measured Rs** | ohm | FLOAT | | CALCF | 0.001 | 200.0 | ERWS | FVS |

Measured value of the rotor resistance.

| Menu | PAR | Description | UM | Type | FB BIT | Def | Min | Max | Acc | Mod |
|---|---|---|---|---|---|---|---|---|---|---|
| **14.15** | **2052** | **Measured DTL** | V | FLOAT | | 0.0 | 0.0 | 100.0 | ERWS | FVS |
| | | Measured value of dead time compensation. | | | | | | | | |

| Menu | PAR | Description | UM | Type | FB BIT | Def | Min | Max | Acc | Mod |
|---|---|---|---|---|---|---|---|---|---|---|
| **14.16** | **2054** | **Measured DTS** | V/A | FLOAT | | 0.0 | 0.0 | 100.0 | ERWS | FVS |
| | | Measured compensation gradient value. | | | | | | | | |

| Menu | PAR | Description | UM | Type | FB BIT | Def | Min | Max | Acc | Mod |
|---|---|---|---|---|---|---|---|---|---|---|
| **14.17** | **2056** | **Measured Lsig** | mH | FLOAT | | CALCF | 0.1 | 200.0 | ERWS | FVS |
| | | Measured leakage inductance value. | | | | | | | | |

| Menu | PAR | Description | UM | Type | FB BIT | Def | Min | Max | Acc | Mod |
|---|---|---|---|---|---|---|---|---|---|---|
| **14.18** | **2058** | **Measured ImN** | A | FLOAT | | CALCF | 0.1 | 1000.0 | ERWS | FVS |
| | | Measured rated magnetizing current value. | | | | | | | | |

| Menu | PAR | Description | UM | Type | FB BIT | Def | Min | Max | Acc | Mod |
|---|---|---|---|---|---|---|---|---|---|---|
| **14.19** | **2060** | **Measured ImX** | A | FLOAT | | CALCF | 0.0 | 0.0 | ERWS | FVS |
| | | Measured magnetizing current saturation value. | | | | | | | | |

| Menu | PAR | Description | UM | Type | FB BIT | Def | Min | Max | Acc | Mod |
|---|---|---|---|---|---|---|---|---|---|---|
| **14.20** | **2062** | **Measured FlxN** | Wb | FLOAT | | CALCF | 0.05 | 10.0 | ERWS | FVS |
| | | Measured rated flux value. | | | | | | | | |

| Menu | PAR | Description | UM | Type | FB BIT | Def | Min | Max | Acc | Mod |
|---|---|---|---|---|---|---|---|---|---|---|
| **14.21** | **2064** | **Measured FlxX** | Wb | FLOAT | | CALCF | 0.0 | 0.0 | ERWS | FVS |
| | | Measured flux saturation value. | | | | | | | | |

| Menu | PAR | Description | UM | Type | FB BIT | Def | Min | Max | Acc | Mod |
|---|---|---|---|---|---|---|---|---|---|---|
| **14.22** | **2066** | **Measured P1** | | FLOAT | | 0.5 | 0.0 | 1.0 | ERWS | FVS |
| | | Measured value of the first parameter to define the motor magnetization curve. | | | | | | | | |

| Menu | PAR | Description | UM | Type | FB BIT | Def | Min | Max | Acc | Mod |
|---|---|---|---|---|---|---|---|---|---|---|
| **14.23** | **2068** | **Measured P2** | | FLOAT | | 9.0 | 3.0 | 18.0 | ERWS | FVS |
| | | Measured value of the second parameter to define the motor magnetization curve. | | | | | | | | |

| Menu | PAR | Description | UM | Type | FB BIT | Def | Min | Max | Acc | Mod |
|---|---|---|---|---|---|---|---|---|---|---|
| **14.24** | **2070** | **Measured P3** | | FLOAT | | 0.87 | 0.0 | 1.0 | ERWS | FVS |
| | | Measured value of the third parameter to define the motor magnetization curve. | | | | | | | | |

| Menu | PAR | Description | UM | Type | FB BIT | Def | Min | Max | Acc | Mod |
|---|---|---|---|---|---|---|---|---|---|---|
| **14.25** | **2072** | **Measured Rr** | ohm | FLOAT | | CALCF | 0.001 | 200.0 | ERWS | FVS |
| | | Measured rotor resistance value. | | | | | | | | |

| Menu | PAR | Description | UM | Type | FB BIT | Def | Min | Max | Acc | Mod |
|---|---|---|---|---|---|---|---|---|---|---|
| **14.26** | **2078** | **Take tune parameters** | | BIT | | 0 | 0 | 1 | ERWZ | FVS |
| | | Saves the motor data calculated by the self-tuning procedure in the drive. | | | | | | | | |

***Note!*** Data are not saved permanently. Use the "**Save Parameters**" command in the DRIVE CONFIG menu to save in the permanent memory.

| Menu | PAR | Description | UM | Type | FB BIT | Def | Min | Max | Acc | Mod |
|---|---|---|---|---|---|---|---|---|---|---|
| **14.27** | **680** | **Full scale speed** | rpm | **INT16** | | **CALCI** | **50** | **32000** | **RWZ** | **FVS** |

Setting of the reference value for all speed percentage data (References, Speed adaptives ...) corresponding to 100 % of the actual speed. This parameter can only be changed with the inverter blocked (Enable drive = Disabled). The recommended setting for the value of this parameter is the motor rated speed. If altered, the self-tuning procedure should be repeated.

**Full scale speed** does not define the maximum possible speed. In any case, the maximum speed percentage value is ± 200 % of the **Full scale speed** value.

# 15 - ENCODER CONFIG

The closed-loop control mode requires a speed reading by a digital encoder on the motor shaft. The optional card is necessary in order to acquire the encoder signals. The natural variation in speed generated by machine load induction, known as slippage, can be compensated by the speed feedback supplied by the encoder in SSC mode. In the field oriented vector mode, closed-loop encoder feedback is essential for correct drive operation.

**Note !** This menu is only displayed if a feedback card is installed

| Menu | PAR | Description | UM | Type | FB BIT | Def | Min | Max | Acc | Mod |
|---|---|---|---|---|---|---|---|---|---|---|
| **15.1** | **2100** | **Encoder pulses** | ppr | UINT16 | | 1024 | 128 | 16384 | RWZ | FVS |

Setting of the number of feedback encoder impulses. During setup, for incremental sinusoidal encoders + absolute EnDat, encoder absolute EnDat Full digital and Hiperface encoders this value is set automatically by reading the number of incremental encoder impulses.

With the EnDat Full digital Encoder, the value set automatically may be below the minimum.

| Menu | PAR | Description | UM | Type | FB BIT | Def | Min | Max | Acc | Mod |
|---|---|---|---|---|---|---|---|---|---|---|
| **15.2** | **2102** | **Encoder supply** | V | FLOAT | | 5.2 | 5.2 | CALCF | ERWZ | FVS |

Setting of the encoder supply voltage supplied by the relative optional card. Min and max values are modified according to the type of encoder card applied.

| Type of encoder option | | Def | Min | Max |
|---|---|---|---|---|
| Enc 1 | EXP-DE-I1R1F2-ADL | 5.2 V | 5.2 V | 22.0 V |
| Enc 2 | EXP-SE-I1R1F2-ADL | 5.2 V | 5.2 V | 6.0 V |
| Enc 3 | EXP-SESC-I1R1F2-ADL | 5.2 V | 5.2 V | 6.0 V |
| Enc 4 | EXP-EN/SSI-I1R1F2-ADL | 5.2 V | 5.2 V | 10.0 V |
| Enc 5 | EXP-HIP-I1R1F2-ADL | 8.0 V | 7.0 V | 12.0 V |

| Menu | PAR | Description | UM | Type | FB BIT | Def | Min | Max | Acc | Mod |
|---|---|---|---|---|---|---|---|---|---|---|
| **15.3** | **2104** | **Encoder input config** | | ENUM | | TTL | 0 | 1 | ERWZ | FVS |

Setting of the input configuration of the incremental digital encoder, TTL or HTL.

**0** HTL
**1** TTL

This parameter is automatically set to HTL when the value set in the **Encoder supply** parameter is more than 6.0V.

| Menu | PAR | Description | UM | Type | FB BIT | Def | Min | Max | Acc | Mod |
|---|---|---|---|---|---|---|---|---|---|---|
| **15.4** | **2106** | **Encoder repetition** | | ENUM | | No division | 0 | 3 | ERWZ | FVS |

Setting of the divider to apply to the encoder repeat output frequency.

**0** No division
**1** Divide 2
**2** Divide 4
**3** Divide 8

| Menu | PAR | Description | UM | Type | FB BIT | Def | Min | Max | Acc | Mod |
|---|---|---|---|---|---|---|---|---|---|---|
| **15.5** | **2108** | **Encoder signal Vpp** | V | FLOAT | | 1 | 0.8 | 1.2 | ERWZ | FVS |

Setting of the peak-to-peak voltage value of the encoder signal. Incremental sinusoidal encoders and absolute SinCos encoders normally produce signals with a peak-to-peak voltage of 1 Vpp. Due to loss of voltage along the cable, the value of the peak-to-peak voltage signal received by the feedback card could be lower, generating a **Speed fbk loss** alarm.

This parameter can be used to set the peak-to-peak voltage value of the incremental sinusoidal encoders and absolute SinCos encoders on the input terminals of the feedback card.

| Menu | PAR | Description | UM | Type | FB BIT | Def | Min | Max | Acc | Mod |
|---|---|---|---|---|---|---|---|---|---|---|
| **15.6** | **2110** | **Encoder signal check** | | ENUM | | Check A-B | 0 | 3 | ERWZ | FVS |

Configuration of which incremental digital encoder channels are to be controlled in order to process the **Speed fbk loss** alarm signal.

**0** Check disabled

**1** Check A-B
**2** Check A-B-Z
**4** Check A-B-SE

Set **1** to check for signal on channels A-B

Set **2** to check for signal on channels A-B-Z

If set to **4**, the application controls loss of feedback for SE (single ended) encoders.

If the application detects the absence of feedback the **Speed fbk loss** [22] is generated.

As loss of feedback cannot be detected at speeds of around zero, the control is only performed if the speed reference is higher than the value set in parameter 4564 **SpdFbkLoss threshold**. It is also important to consider the fact that when working with a speed reference slightly above the limit set in parameter 4564 **SpdFbkLoss threshold**, the speed error could exceed the set threshold, given the load or current limit, and generate false alarms.

In that case increase the value of parameter 4550 **SpdRefLoss threshold** or of parameter 4554 **SpdRefLoss holdoff**.

| Menu | PAR | Description | UM | Type | FB BIT | Def | Min | Max | Acc | Mod |
|---|---|---|---|---|---|---|---|---|---|---|
| **15.7** | **2112** | **Encoder SSI bits** | | UINT16 | | 25 | 13 | 25 | ERWZ | FVS |

Setting of the length of the SSI package, defined as the number of clock cycles, in that the packages of the absolute SSI encoders available on the market vary in length from 13 to 25 bits.

| Menu | PAR | Description | UM | Type | FB BIT | Def | Min | Max | Acc | Mod |
|---|---|---|---|---|---|---|---|---|---|---|
| **15.8** | **2114** | **Encoder SSI pos bits** | | UINT16 | | 25 | 11 | 25 | ERWZ | FVS |

This parameter sets the number of position bits of SSI encoder.

| Menu | PAR | Description | UM | Type | FB BIT | Def | Min | Max | Acc | Mod |
|---|---|---|---|---|---|---|---|---|---|---|
| **15.9** | **2130** | **Encoder direction** | | ENUM | | Not inverted | 0 | 1 | RWZ | FVS |

Setting of the sign of the information obtained from the incremental or absolute encoder.

**0** Not inverted
**1** Inverted

By setting 0 the encoder feedback signals are not inverted.

By setting 1 the encoder feedback signals are inverted

According to international standards, positive references are associated with clockwise motor rotation, seen from the control side (shaft). To ensure correct operation, the regulation algorithms ensure that positive speed references correspond to positive speed measurements.

If the motor pulley is mounted on the side opposite the command side, it will turn in an anticlockwise direction when the speed is positive: to make the pulley turn in a clockwise direction, the motor phase sequence is modified, which inverts the speed measurement sign. To restore the correct speed measurement sign, invert the incremental encoder A+ and A- signals and the absolute encoder Sin+ and Sin- signals on the encoder connections. The absolute part cannot be inverted with Endat and Hiperface absolute encoders.

| Menu | PAR | Description | UM | Type | FB BIT | Def | Min | Max | Acc | Mod |
|---|---|---|---|---|---|---|---|---|---|---|
| **15.10** | **2132** | **Encoder mode** | | ENUM | | None | CALCI | CALCI | ERWZ | FVS |

**ADL300B:** The drive has an integrated encoder card (SinCos & Incremental TTL Encoder). The encoder mode can be selected in accordance with the following table:

**0** None (Default)
**1** Digital FP
**2** Digital F
**3** Sinus SINCOS
**5** Sinus ENDAT
**6** Sinus SSI
**7** Sinus HIPER
**8** ENDAT

***Note:*** **There is no need to restart the drive when the mode is changed.**

**ADL300 Basic with Digital FP / Digital F / Sinus / Sinus SINCOS encoder and ADL300 Basic with Sinus ENDAT / Sinus SSI encoder have different commercial codes (see ADL300 catalog).**

**ADL300A**: the drive supports different types of encoder cards. The mode can only be selected if an incremental digital encoder card is used. If an EN/SSI encoder card is used, the mode is automatically set by the drive in accordance with the

type of encoder detected. For all other encoder cards, the mode is set in accordance with the card used. The modes are listed in the following table:

| | | Encoder Card |
|---|---|---|
| **0** | None | |
| **1** | Digital FP | EXP-DE-I1R1F2-ADL |
| **2** | Digital F (Default) | EXP-DE-I1R1F2-AD |
| **3** | Sinus | EXP-SE-I1R1F2-ADL |
| **4** | Sinus SINCOS | EXP-SESC-I1R1F2-ADL |
| **5** | Sinus ENDAT | EXP-EN/SSI-I1R1F2-ADL (*) |
| **6** | Sinus SSI | EXP-EN/SSI-I1R1F2-ADL (*) |
| **7** | Sinus HIPER | EXP-HIP-I1R1F2-ADL |
| **8** | ENDAT | EXP-EN/SSI-I1R1F2-ADL (*) |

(*) The card automatically selects the correct mode in relation to the encoder type.

| Menu | PAR | Description | UM | Type | FB BIT | Def | Min | Max | Acc | Mod |
|---|---|---|---|---|---|---|---|---|---|---|
| **15.11** | **2134** | **Encoder speed filter** | ms | FLOAT | | 2.0 | 0.1 | 20.0 | ERW | FVS |

Setting of the time constant of the filter applied to the feedback encoder pulse reading. The parameter affects both the accuracy of the speed measurement and the dynamics obtainable in closed loop control. On the other hand, the use of a speed measurement filter introduces delays that do not permit high control loop dynamics. Low settings extend the regulation bandwidth but may accentuate any disturbance. The filter is applied to the speed reported in the **Encoder speed** parameter.

| Menu | PAR | Description | UM | Type | FB BIT | Def | Min | Max | Acc | Mod |
|---|---|---|---|---|---|---|---|---|---|---|
| **15.12** | **2150** | **Encoder speed** | rpm | INT16 | 16/32BIT | 0 | 0 | 0 | ER | FVS |

The motor speed measured by the incremental encoder is displayed, filtered by the **Encoder speed filter** parameter.

| Menu | PAR | Description | UM | Type | FB BIT | Def | Min | Max | Acc | Mod |
|---|---|---|---|---|---|---|---|---|---|---|
| **15.13** | **2162** | **Encoder position** | cnt | UINT16 | 16BIT | 0 | 0 | 0 | ER | FVS |

The impulse count obtained from the incremental encoder reading is displayed: 1 encoder turn is equal to the value entered in Encoder pulses multiplied by 4.

| Menu | PAR | Description | UM | Type | FB BIT | Def | Min | Max | Acc | Mod |
|---|---|---|---|---|---|---|---|---|---|---|
| **15.14** | **2172** | **SpdFbkLoss code** | | UINT32 | | 0 | 0 | 0 | ER | FVS |

The **Speed fbk loss** alarm generated by an encoder fault is displayed. Each type of encoder generates the alarm differently (incremental signal error, absolute signal error, serial error), so this parameter is used to display information about the alarm that has been activated. In case of several concurrent causes, these are shown in this parameter.

| Bit | Value | Name |
|---|---|---|
| 0 | 0x01 | CHA |
| 1 | 0x02 | CHB |
| 2 | 0x04 | CHZ |
| 3 | 0x08 | MOD_INCR |
| 4 | 0x10 | MOD_ABS |
| 5 | 0x20 | CRC_CKS_P |
| 6 | 0x40 | ACK_TMO |
| 7 | 0x80 | DT1_ERR |
| 8 | 0x100 | Setup error |
| | | |
| 10..15 | | Free |
| 16..31 | | Depends on the encoder |

For further details reference should be made to the description of the **Speed fbk loss** alarm and to the SFL alarms chapter according to the type of feedback.

**Note !** For the correct interpretation of the cause of the alarm trigger, it is necessary to transform the hex code indicated in parameter 15.14 SpdFbkLoss code, PAR 2172 , in the corresponding binary and verify in the encoder table that the active bits and related description are used.

Example with encoder Endat:

PAR 2172 = A0H (hex value)

In the table "**Speed fbk loss [22] alarm with absolute encoder EnDat**" A0 is not indicated in the value column.
A0 should be contemplated as a bitword with meaning A0 -> 10100000 -> bit 5 and bit 7 . The following causes simultaneously intervene:

Bit 5 = 20H Cause: the SSI signal interferences cause an error in the CKS or parity
Bit 7 = 80H Cause: The encoder has detected an incorrect operation and communicates it to the converter through the Error bit. Bits 16..31 present the type of incorrect encoder operation detected.

# 16 - SPEED REG GAINS

The speed adaptive allows different speed regulator gains to be obtained according to the speed or another value. The behaviour of the speed regulator can thus be configured in the best way for the specific application requirements.

**Note !** Current, flux and voltage regulators can be set using the self-tuning procedure. If this is not successful, current and flux regulators can be tuned manually (this does not apply to voltage regulators, whch must not be modified by the user). The speed regulator must be tuned manually. Gains are usually adjusted according to the drive speed.

Total gains used by the speed regulator are calculated as shown in the following examples. Results are in engineering units:

$$\text{Total proportional gain} = \frac{\text{Speed reg P1 gain (PAR 2200)}}{100\%} * \text{Speed reg P gain (PAR 2236)}$$

$$\text{Total integral gain} = \frac{\text{Speed reg I1 gain (PAR 2202)}}{100\%} * \text{Total proportional gain} * \frac{1}{\text{Speed reg I time (PAR 2238)}}$$

| Menu | PAR | Description | UM | Type | FB BIT | Def | Min | Max | Acc | Mod |
|---|---|---|---|---|---|---|---|---|---|---|
| **16.1** | **2200** | **Speed reg P1 gain** | perc | INT16 | | 100 | 0 | 1000 | RW | F_S |

Setting of the proportional gain of the speed regulator, set 1.

| Menu | PAR | Description | UM | Type | FB BIT | Def | Min | Max | Acc | Mod |
|---|---|---|---|---|---|---|---|---|---|---|
| **16.2** | **2202** | **Speed reg I1 gain** | perc | INT16 | | 100 | 0 | 1000 | RW | F_S |

Setting of the integral gain of the speed regulator, set 1. Increasing the proportional gain value increases the proportional action of the regulator

| Menu | PAR | Description | UM | Type | FB BIT | Def | Min | Max | Acc | Mod |
|---|---|---|---|---|---|---|---|---|---|---|
| **16.3** | **2204** | **Speed reg P2 gain** | perc | INT16 | | 100 | 0 | 1000 | RW | F_S |

Setting of the proportional gain of the speed regulator, set 2.

| Menu | PAR | Description | UM | Type | FB BIT | Def | Min | Max | Acc | Mod |
|---|---|---|---|---|---|---|---|---|---|---|
| **16.4** | **2206** | **Speed reg I2 gain** | perc | INT16 | | 100 | 0 | 1000 | RW | F_S |

Setting of the integral gain of the speed regulator, set 2. Increasing the proportional gain value increases the proportional action of the regulator

| Menu | PAR | Description | UM | Type | FB BIT | Def | Min | Max | Acc | Mod |
|---|---|---|---|---|---|---|---|---|---|---|
| **16.5** | **2208** | **Speed reg P3 gain** | perc | INT16 | | 100 | 0 | 1000 | ERW | F_S |

Setting of the proportional gain of the speed regulator, set 3.

| Menu | PAR | Description | UM | Type | FB BIT | Def | Min | Max | Acc | Mod |
|---|---|---|---|---|---|---|---|---|---|---|
| **16.6** | **2210** | **Speed reg I3 gain** | perc | INT16 | | 100 | 0 | 1000 | ERW | F_S |

Setting of the integral gain of the speed regulator, set 3. Increasing the proportional gain value increases the proportional action of the regulator.

| Menu | PAR | Description | UM | Type | FB BIT | Def | Min | Max | Acc | Mod |
|---|---|---|---|---|---|---|---|---|---|---|
| **16.7** | **2228** | **Speed reg P0 gain** | perc | INT16 | | 100 | 0 | 1000 | ERW | F_S |

Setting of the proportional gain of the speed regulator at zero speed.

| Menu | PAR | Description | UM | Type | FB BIT | Def | Min | Max | Acc | Mod |
|---|---|---|---|---|---|---|---|---|---|---|
| **16.8** | **2230** | **Speed reg I0 gain** | perc | INT16 | | 100 | 0 | 1000 | ERW | F_S |

Setting of the integral gain of the speed regulator at zero speed. Increasing the proportional gain value increases the proportional action of the regulator

| Menu | PAR | Description | UM | Type | FB BIT | Def | Min | Max | Acc | Mod |
|---|---|---|---|---|---|---|---|---|---|---|
| **16.9** | **2218** | **Gain adp spd thr2_1** | perc | FLOAT | | 85.0 | 0.0 | 100.0 | ERW | F_S |

Setting of the speed threshold for changing gains from set 1 to set 2.

| Menu | PAR | Description | UM | Type | FB BIT | Def | Min | Max | Acc | Mod |
|---|---|---|---|---|---|---|---|---|---|---|
| **16.10** | **2220** | **Gain adp spd band2_1** | perc | FLOAT | | 5.0 | 0.0 | 100.0 | ERW | F_S |

Setting of the band within which gains vary between set 1 and set 2. The use of this parameter ensures a smooth transition between the two parameter sets.

| Menu | PAR | Description | UM | Type | FB BIT | Def | Min | Max | Acc | Mod |
|---|---|---|---|---|---|---|---|---|---|---|
| **16.11** | **2222** | **Gain adp spd thr3_2** | perc | FLOAT | | 2.0 | 0.0 | 100.0 | ERW | F_S |

Setting of the speed threshold for changing gains from set 3 to set 2.

| Menu | PAR | Description | UM | Type | FB BIT | Def | Min | Max | Acc | Mod |
|---|---|---|---|---|---|---|---|---|---|---|
| **16.12** | **2224** | **Gain adp spd band3_2** | perc | FLOAT | | 1.0 | 0.0 | 100.0 | ERW | F_S |

Setting of the band within which gains vary between set 3 and set 2. The use of this parameter ensures a smooth transition between the two parameter sets.

| Menu | PAR | Description | UM | Type | FB BIT | Def | Min | Max | Acc | Mod |
|---|---|---|---|---|---|---|---|---|---|---|
| **16.13** | **2246** | **Gain adp spd thr0_2** | perc | FLOAT | | 1.0 | 0.0 | 100.0 | ERW | F_S |

Setting of the speed threshold for changing gains from set 0 to set 2.

| Menu | PAR | Description | UM | Type | FB BIT | Def | Min | Max | Acc | Mod |
|---|---|---|---|---|---|---|---|---|---|---|
| **16.14** | **2248** | **Gain adp spd band0_2** | perc | FLOAT | | 0.3 | 0.0 | 100.0 | ERW | F_S |

Setting of the band within which gains vary between set 0 and set 2. The use of this parameter ensures a smooth transition between the two parameter sets.

| Menu | PAR | Description | UM | Type | FB BIT | Def | Min | Max | Acc | Mod |
|---|---|---|---|---|---|---|---|---|---|---|
| **16.15** | **2244** | **Gain profile mode** | | ENUM | | Profile 0213 | 0 | 3 | ERW | F_S |

Gain profile modes.

**0** Profile 1
**1** Profile 21
**2** Profile 321
**3** Profile 0213

- If set to 0 the profile used is that shown in the figure below:

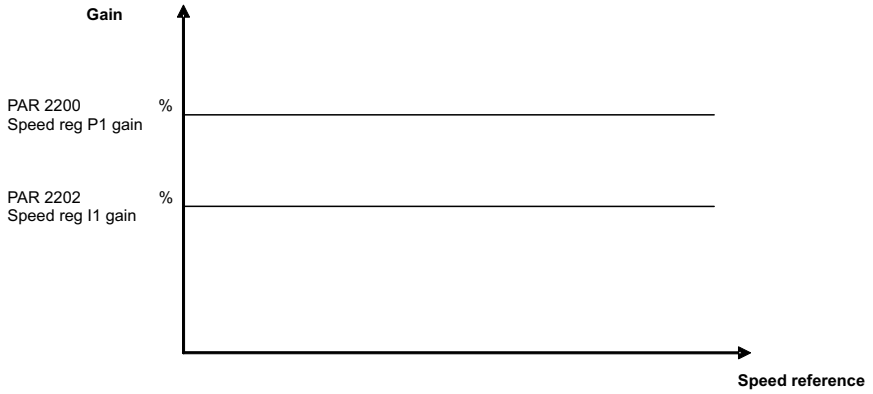


- If set to 1 the profile used is that shown in the figure below:

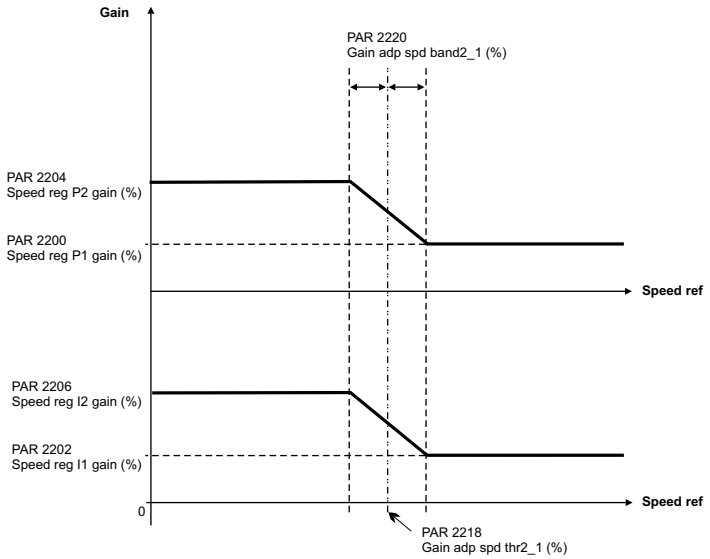

- If set to 2 the profile used is that shown in the figure below:

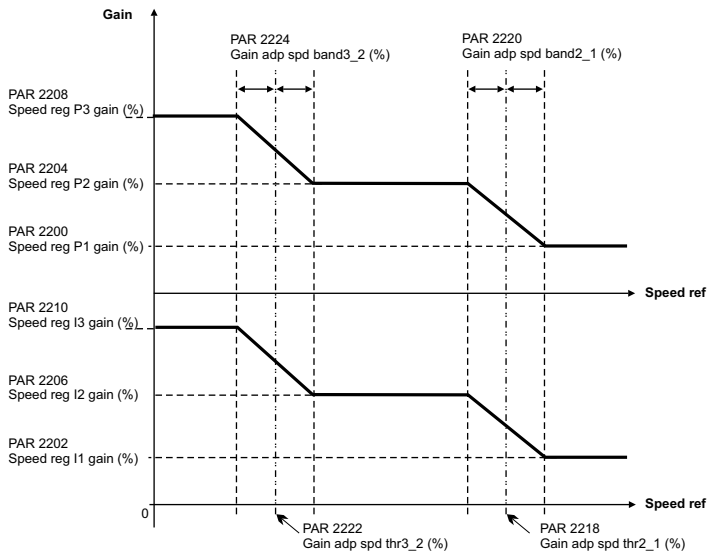


- If set to 3 the profile used is that shown in the figure below:

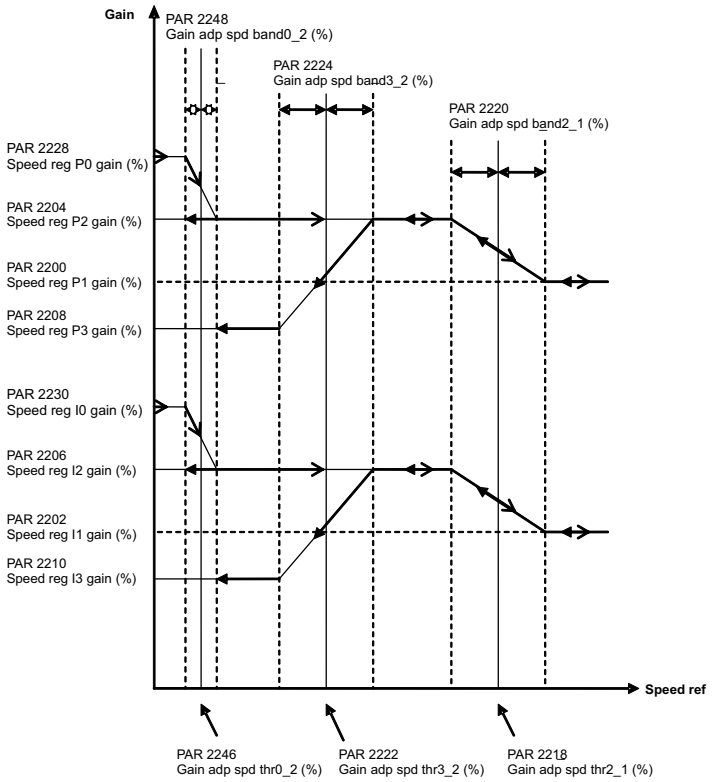


| Menu | PAR | Description | UM | Type | FB BIT | Def | Min | Max | Acc | Mod |
|---|---|---|---|---|---|---|---|---|---|---|
| **16.16** | **2232** | **Spd reg P gain Inuse** | perc | INT16 | 16/32BIT | 100 | 0 | 1000 | ER | F_S |

The current proportional coefficient of the speed regulator is displayed as a percentage.

| Menu | PAR | Description | UM | Type | FB BIT | Def | Min | Max | Acc | Mod |
|---|---|---|---|---|---|---|---|---|---|---|
| **16.17** | **2234** | **Spd reg I gain Inuse** | perc | INT16 | 16/32BIT | 100 | 0 | 1000 | ER | F_S |

The current integral coefficient of the speed regulator is displayed as a percentage.

| Menu | PAR | Description | UM | Type | FB BIT | Def | Min | Max | Acc | Mod |
|---|---|---|---|---|---|---|---|---|---|---|
| **16.18** | **2236** | **Speed reg P gain** | N/rpm | FLOAT | | CALCF | 0.0 | 500.0 | ERWS | F_S |

Setting of the proportional coefficient of the speed regulator.

| Menu | PAR | Description | UM | Type | FB BIT | Def | Min | Max | Acc | Mod |
|---|---|---|---|---|---|---|---|---|---|---|
| **16.19** | **2238** | **Speed reg I time** | ms | FLOAT | | CALCF | 1.0 | 5000.0 | ERWS | F_S |

Setting of the integral coefficient of the speed regulator. Reducing the integral time value increases the integral action of the regulator.

| Menu | PAR | Description | UM | Type | FB BIT | Def | Min | Max | Acc | Mod |
|---|---|---|---|---|---|---|---|---|---|---|
| **16.20** | **2240** | **Inertia** | kgm2 | FLOAT | | SIZE | 0.001 | 100.0 | RWZS | F_S |

Setting of total inertia of the application with reference to the motor shaft. When this parameter is modified, all speed regulator gains are initialised according to the value specified by parameter PAR 2242. An increase in the dynamic response of the speed regulator to a variation in the reference, can be modified by changing the current value during the acceleration/ deceleration phase, to counter the applied machine inertia.

| Menu | PAR | Description | UM | Type | FB BIT | Def | Min | Max | Acc | Mod |
|---|---|---|---|---|---|---|---|---|---|---|
| **16.21** | **2242** | **Bandwidth** | rad/s | FLOAT | | SIZE | 1.0 | 500.0 | RWZS | F_S |

Setting of the bandwidth. Increasing the setting of this parameter increases the dynamic response and makes the system more rigid.

# 17 - REGULATOR PARAM

| Menu | PAR | Description | UM | Type | FB BIT | Def | Min | Max | Acc | Mod |
|---|---|---|---|---|---|---|---|---|---|---|
| **17.1** | **2250** | **Current reg P gain** | V/A | FLOAT | | CALCF | 0.0 | 0.0 | ERWS | F_S |

Setting of the proportional coefficient of the current regulator.

| Menu | PAR | Description | UM | Type | FB BIT | Def | Min | Max | Acc | Mod |
|---|---|---|---|---|---|---|---|---|---|---|
| **17.2** | **2252** | **Current reg I time** | ms | FLOAT | | CALCF | 0.01 | 10000.0 | ERWS | F_S |

Setting of the integral coefficient of the current regulator.

| Menu | PAR | Description | UM | Type | FB BIT | Def | Min | Max | Acc | Mod |
|---|---|---|---|---|---|---|---|---|---|---|
| **17.3** | **2260** | **Flux reg P gain** | A/Wb | FLOAT | | CALCF | 0.0 | 0.0 | ERWS | F__ |

Setting of the proportional coefficient of the flux regulator.

| Menu | PAR | Description | UM | Type | FB BIT | Def | Min | Max | Acc | Mod |
|---|---|---|---|---|---|---|---|---|---|---|
| **17.4** | **2262** | **Flux reg I time** | ms | FLOAT | | CALCF | 0.01 | 10000.0 | ERWS | F__ |

Setting of the integral coefficient of the flux regulator.

| Menu | PAR | Description | UM | Type | FB BIT | Def | Min | Max | Acc | Mod |
|---|---|---|---|---|---|---|---|---|---|---|
| **17.5** | **2264** | **Flux reg P gain OL** | A/Wb | FLOAT | | CALCF | 0.0 | 0.0 | ERWS | __S |

Setting of the flux regulator proportional gain when the drive is used in open loop sensorless vector control mode. This parameter is set automatically by the self-tuning procedure.

| Menu | PAR | Description | UM | Type | FB BIT | Def | Min | Max | Acc | Mod |
|---|---|---|---|---|---|---|---|---|---|---|
| **17.6** | **2266** | **Flux reg I time OL** | ms | FLOAT | | CALCF | 0.01 | 10000.0 | ERWS | __S |

Setting of the flux regulator integral time when the drive is used in open loop sensorless vector control mode. This parameter is set automatically by the self-tuning procedure.

| Menu | PAR | Description | UM | Type | FB BIT | Def | Min | Max | Acc | Mod |
|---|---|---|---|---|---|---|---|---|---|---|
| **17.7** | **2270** | **Voltage reg P gain** | Wb/V | FLOAT | | CALCF | 0.0 | 0.0 | ERWS | F_S |

Setting of the proportional coefficient of the voltage regulator.

| Menu | PAR | Description | UM | Type | FB BIT | Def | Min | Max | Acc | Mod |
|---|---|---|---|---|---|---|---|---|---|---|
| **17.8** | **2272** | **Voltage reg I time** | s | FLOAT | | CALCF | 0.1 | 100.0 | ERWS | F_S |

Setting of the integral coefficient of the voltage regulator.

| Menu | PAR | Description | UM | Type | FB BIT | Def | Min | Max | Acc | Mod |
|---|---|---|---|---|---|---|---|---|---|---|
| **17.9** | **2280** | **Dead time limit** | V | FLOAT | | SIZE | 0.0 | 50.0 | ERWS | FVS |

Setting of the dead time voltage compensation value.

The dead time compensation function (**Dead time compensation**), compensates the distortion of output voltage caused by the voltage drop on the IGBT devices and their switching characteristics.

Distortion of output voltage could cause irregular motor rotation.

| Menu | PAR | Description | UM | Type | FB BIT | Def | Min | Max | Acc | Mod |
|---|---|---|---|---|---|---|---|---|---|---|
| **17.10** | **2282** | **Dead time slope** | V/A | FLOAT | | SIZE | 0.0 | 200.0 | ERWS | FVS |

Setting of the dead time compensation slope value.

| Menu | PAR | Description | UM | Type | FB BIT | Def | Min | Max | Acc | Mod |
|---|---|---|---|---|---|---|---|---|---|---|
| **17.11** | **2290** | **Voltage base** | V | FLOAT | | CALCF | 50.0 | 690.0 | ERWS | F_S |

Setting of the basic voltage of the motor. This parameter is calculated automatically by the self-tuning procedure.

| Menu | PAR | Description | UM | Type | FB BIT | Def | Min | Max | Acc | Mod |
|---|---|---|---|---|---|---|---|---|---|---|
| **17.12** | **2292** | **Voltage margin** | perc | FLOAT | | 5.0 | 0.0 | 10.0 | ERWS | F_S |

Setting of the voltage regulation margin according to the available voltage. In case of a Voltage base setting close to or equal to the actual mains value, **Voltage margin** represents the margin allowable by the voltage regulation to perform rapid current variations when load steps are suddenly applied.

A value of 5% allows a very fast response to load steps but with a loss of output voltage and thus power output (reduced power output).

The minimum value (1%) allows a maximum output voltage (around 98%) of the mains voltage to be achieved but with loss of quality of the dynamic response.

| Menu | PAR | Description | UM | Type | FB BIT | Def | Min | Max | Acc | Mod |
|---|---|---|---|---|---|---|---|---|---|---|
| **17.13** | **2300** | **Minimum speed OL** | rpm | INT16 | | 15 | 0 | CALCI | ERW | __S |

Setting of the minimum speed threshold in the sensorless vector control mode. Below this limit the sensorless regulator is disabled.

| Menu | PAR | Description | UM | Type | FB BIT | Def | Min | Max | Acc | Mod |
|---|---|---|---|---|---|---|---|---|---|---|
| **17.14** | **2302** | **Min speed delay OL** | ms | UINT16 | | 1500 | 0 | 5000 | ERW | __S |

Setting of the delay for disabling the sensorless regulator.

| Menu | PAR | Description | UM | Type | FB BIT | Def | Min | Max | Acc | Mod |
|---|---|---|---|---|---|---|---|---|---|---|
| **17.15** | **2304** | **Speed filter OL** | ms | FLOAT | | 5.0 | 0.1 | 20.0 | ERWZ | __S |

Setting of the time constant for the estimated speed in sensorless vector mode. By increasing this parameter it is possible to reduce the level of disturbance of the estimated speed, but the speed control dynamics are also lowered.

| Menu | PAR | Description | UM | Type | FB BIT | Def | Min | Max | Acc | Mod |
|---|---|---|---|---|---|---|---|---|---|---|
| **17.16** | **2306** | **Flux observe gain OL** | | FLOAT | | 500.0 | 10.0 | 5000.0 | ERW | __S |

Flux observer gain in open-loop flux vector control mode.

In case at the low speed (<400 rpm) the oscillation is still present change the setting of this parameter at a lower value.

In case at the high speed (> 800 rpm) the oscillation is still present change the setting of parameter 2604 at a higher value.

| Menu | PAR | Description | UM | Type | FB BIT | Def | Min | Max | Acc | Mod |
|---|---|---|---|---|---|---|---|---|---|---|
| **17.17** | **2308** | **OverFlux perc** | **perc** | **FLOAT** | | **120.0** | **100.0** | **140.0** | **ERW** | **__S** |

The value is expressed as the percentage in excess of the rated flux.

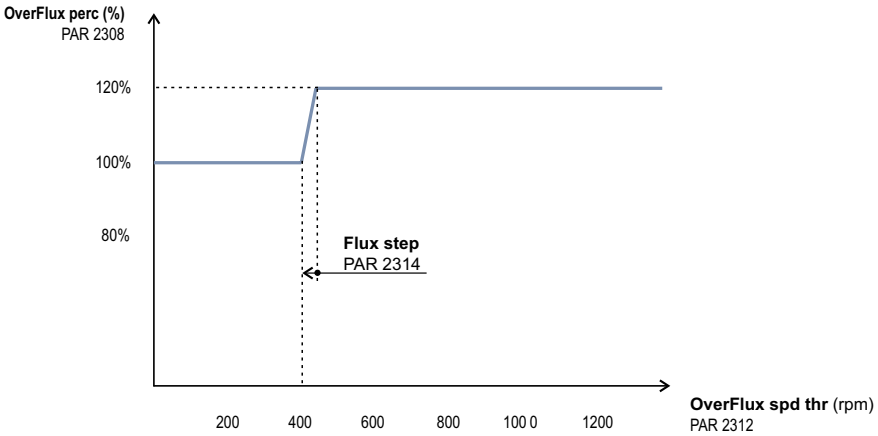


| Menu | PAR | Description | UM | Type | FB BIT | Def | Min | Max | Acc | Mod |
|---|---|---|---|---|---|---|---|---|---|---|
| **17.18** | **2310** | **Flux weakening OL** | | ENUM | | Disable | 0 | 1 | ERWZ | __S |

Enables or disables flux reduction in the open-loop flux vector control mode.

If set to Disable, the flux is not reduced when the speed of the motor exceeds the nominal speed. This results in loss of control and instability.

This problem can be prevented by setting the parameter to Enable.

In the open-loop mode a flux value of less than the nominal speed of the motor is advantageous in terms of stability.

**0** Disable
**1** Enable

| Menu | PAR | Description | UM | Type | FB BIT | Def | Min | Max | Acc | Mod |
|---|---|---|---|---|---|---|---|---|---|---|

| | | | | | | | | | |
|---|---|---|---|---|---|---|---|---|---|
| **17.19** | **2312** | **OverFlux spd thr** | rpm | FLOAT | 400.0 | 10.0 | 1000.0 | ERW | __S |

Speed limit below which the overflux value set in PAR 2308 **OverFlux perc.**

| Menu | PAR | Description | UM | Type | FB BIT | Def | Min | Max | Acc | Mod |
|---|---|---|---|---|---|---|---|---|---|---|
| **17.20** | **2314** | **Flux step** | | FLOAT | | 20.0 | 1.0 | 2000.0 | ERW | __S |

Setting of the ramp time in the transition between the rated flux and the overflux value set in PAR 2308 **Over-Flux perc.**

| Menu | PAR | Description | UM | Type | FB BIT | Def | Min | Max | Acc | Mod |
|---|---|---|---|---|---|---|---|---|---|---|
| **17.21** | **2600** | **Adapt Flux En** | | ENUM | | Disable | 0 | 1 | ERW | __S |

The Oscillations Control function allows to compensate the oscillations that the elevator could have when is moving at the nominal speed. This is possible with a dynamic adaptation of the regulation gain of the controller available in the drive.
The setting of the 2306-2600-2602-2604-2606 parameters allows to create a corrective profile used by the regulator of the drive.
This parameter allows to enable the oscillation control.

**0** Disable
**1** Enable

| Menu | PAR | Description | UM | Type | FB BIT | Def | Min | Max | Acc | Mod |
|---|---|---|---|---|---|---|---|---|---|---|
| **17.22** | **2602** | **Adapt Flux Min Sp** | rpm | FLOAT | | 400.0 | 0.0 | 3000.0 | ERW | __S |

It is the minimum speed to generate the corrective profile.

| Menu | PAR | Description | UM | Type | FB BIT | Def | Min | Max | Acc | Mod |
|---|---|---|---|---|---|---|---|---|---|---|
| **17.23** | **2604** | **Adapt Flux Max Sp** | rpm | FLOAT | | 900.0 | 0.0 | 3000.0 | ERW | __S |

It is the maximum speed to generate the corrective profile.

| Menu | PAR | Description | UM | Type | FB BIT | Def | Min | Max | Acc | Mod |
|---|---|---|---|---|---|---|---|---|---|---|
| **17.24** | **2606** | **Adapt Flux Gain** | | FLOAT | | 10.0 | 1.0 | 50.0 | ERW | __S |

This parameter allows to tune the oscillation effect.
The generated corrective profile is used by the regulator of the drive.

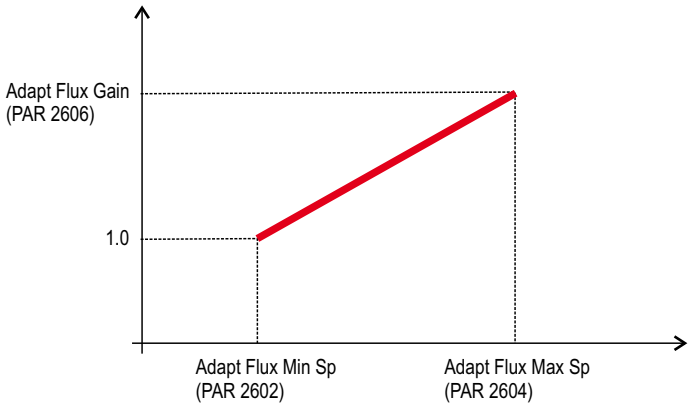


| Menu | PAR | Description | UM | Type | FB BIT | Def | Min | Max | Acc | Mod |
|---|---|---|---|---|---|---|---|---|---|---|
| **17.25** | **2610** | **Adv Stop Enabler** | | ENUM | | Off_ | 0 | 3 | ERW | __S |

Corrective approach at destination floor function. This function (to be used in Speed Control Mode only) enables the correction of the speed profile to assure the wished behaviour in the car approach at the destination floor. The behaviour of the sector in the light blue circle is tunable. This function is useful in case the profile is not the precise as wished.

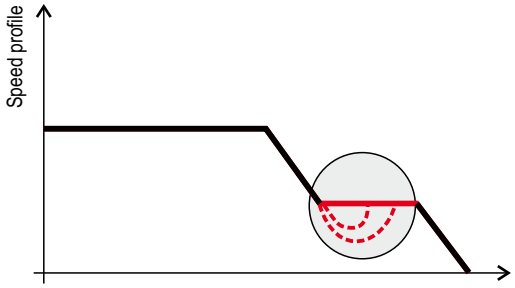


Optionally, the function allows to compensate the mechanical friction of the elevator. To do this the drive performs an estimation of the friction introduced by the mechanical parts of the elevator that must be compensate by the drive. This optional because in some cases this couldn't be required. To adjust the approach the 2610-2612-2614 and 2616 parameters

are available.

To enable the corrective approach function this parameter must be set to the value 1.

Optionally, if the friction compensation function is required to improve the performance of the self-stop, the parameter must be set to 2 and the hereafter reported procedure must be followed:

1. Set Parameter 2612
2. Set Parameter 2614
3. Move in up direction the elevator at a fixed speed in the range 150rpm ÷ 300rpm for 5 seconds Move in down direction the elevator at a fixed speed in the range 150rpm ÷ 300rpm for 5 seconds Set the parameter 2610 to 2 (Enable the Advanced Stop Function)
4. Save the parameters

To remove the Friction Compensation (the self-stop is kept enabled), follow the hereafter reported steps:

1. Set the parameter 2610 to 3 (Friction Reset)
2. Save the parameters

| | | |
|---|---|---|
| **0** | Off_ | (Disable) |
| **1** | On_ | (Enable) |
| **2** | Friction Cal | (Friction Calculation) |
| **3** | Fr Cal Reset | (Friction Reset) |

| Menu | PAR | Description | UM | Type | FB BIT | Def | Min | Max | Acc | Mod |
|---|---|---|---|---|---|---|---|---|---|---|
| **17.26** | **2612** | **Adv Stop MinSpeed** | rpm | FLOAT | | 0.0 | 0.0 | 100.0 | ERW | __S |

It is the minimum speed to generate the corrective profile.

| Menu | PAR | Description | UM | Type | FB BIT | Def | Min | Max | Acc | Mod |
|---|---|---|---|---|---|---|---|---|---|---|
| **17.27** | **2614** | **Adv Stop MaxSpeed** | rpm | FLOAT | | 15.0 | 0.0 | 100.0 | ERW | __S |

It is the maximum speed to generate the corrective profile.

| Menu | PAR | Description | UM | Type | FB BIT | Def | Min | Max | Acc | Mod |
|---|---|---|---|---|---|---|---|---|---|---|
| **17.28** | **2616** | **Adv Stop Gain** | | FLOAT | | 1.0 | 0.5 | 2.0 | ERW | __S |

This parameter allows to tune the profile for the approaching area.

The generated corrective profile is used by the regulator of the drive.

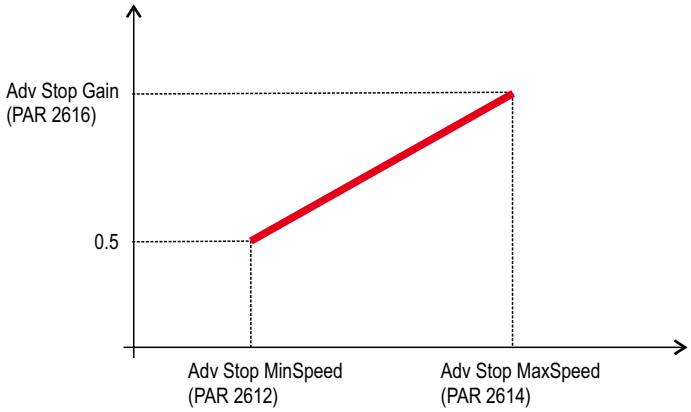


**Note!** In order to work the function needs that elevators has to reach a stable speed between 100 and 400 Rpm for at least one second. If the condition is not satisfied automatically the function turns to disable.

| Menu | PAR | Description | UM | Type | FB BIT | Def | Min | Max | Acc | Mod |
|---|---|---|---|---|---|---|---|---|---|---|
| **17.29** | **2650** | **Start Torque FF En** | | ENUM | | Disable | 0 | 1 | ERW | __S |

Motor back rotation control function. At the start of the travel of the car, the lift sequence requires the mechanical brakes opening and the motor rotating in the right direction. The motor has to react fast in order **to compensate** the load without creating any movement of the car (often caused by the back rotation of the motor). This is achievable controlling in a very fine way the intensity of the compensation introduced by the drive. To remove the back rotation the 2650-2652 parameters must be set.

This parameter allows to enable the back rotation control function.

**0** Disable
**1** Enable

| Menu | PAR | Description | UM | Type | FB BIT | Def | Min | Max | Acc | Mod |
|---|---|---|---|---|---|---|---|---|---|---|
| **17.30** | **2652** | **Start Torque FF Gain** | | FLOAT | | 0.1 | 0.0 | 100.0 | ERW | __S |

This parameter allows to tune the intensity of the compensation introduced by control of the drive.

**Note!** Before to enable the function tune the speed gains (menu 16 – Speed Reg Gains)

# 18 - TORQUE CONFIG

| Menu | PAR | Description | UM | Type | FB BIT | Def | Min | Max | Acc | Mod |
|---|---|---|---|---|---|---|---|---|---|---|
| **18.1** | **2350** | **Torque curr lim Pos** | A | FLOAT | 16/32BIT | CALCF | 0.0 | CALCF | ERWS | FVS |

Setting of the active torque limit of the drive for the positive current direction (clockwise rotation and anti-clockwise braking).

| Menu | PAR | Description | UM | Type | FB BIT | Def | Min | Max | Acc | Mod |
|---|---|---|---|---|---|---|---|---|---|---|
| **18.2** | **2352** | **Torque curr lim Neg** | A | FLOAT | 16/32BIT | CALCF | 0.0 | CALCF | ERWS | FVS |

Setting of the active torque limit of the drive for the negative current direction (anti-clockwise rotation and clockwise braking).

| Menu | PAR | Description | UM | Type | FB BIT | Def | Min | Max | Acc | Mod |
|---|---|---|---|---|---|---|---|---|---|---|
| **18.3** | **2354** | **Torque curr lim sel** | | ENUM | | Sorg limcoppia | 0 | 3 | ERWZ | FVS |

Setting of the type of behaviour of the drive in the current limit condition.

**0** Off
**1** T clim +/-
**2** T clim mot/gen
**3** T limit src

If set to **0** no specific type of current limitation is set.

If set to **1** the active positive torque limit is **Torque curr lim Pos** and the active negative torque limit is **Torque curr lim Neg**.

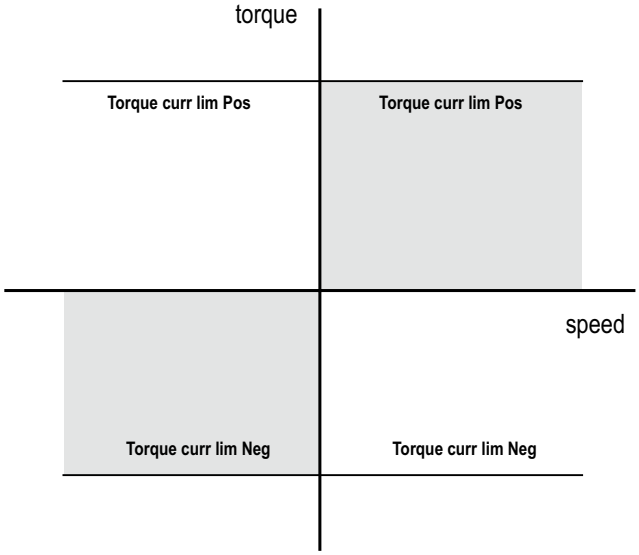


Torque limits with Torque curr lim Sel = 1

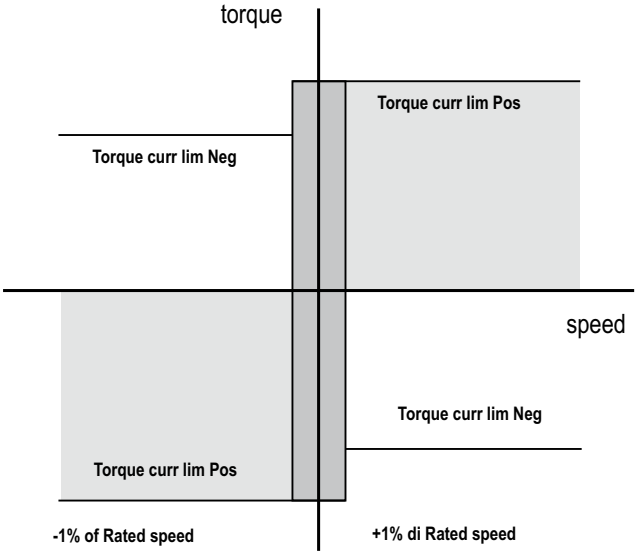


Torque limits with Torque curr lim sel = 2

If set to **2** three conditions are possible:

1 – If the motor speed is > +1% of **Rated speed** the active positive torque limit is **Torque curr lim Pos** and the active negative torque limit is **Torque curr lim Neg**.

2 – If the motor speed is < -1% of **Rated speed** the active positive torque limit is **Torque curr lim Pos** and the active negative torque limit is **Torque curr lim Neg**.

3 – If -1% of Motor non speed < motor speed < + 1% of **Rated speed** the active positive torque limit is **Torque curr lim Pos** and the active negative torque limit is **Torque curr lim Neg**

If set to **3** the torque limits are symmetrical. The torque reference is the value of **Torque curr lim Pos**. This mode is not managed with SSC control mode.

| Menu | PAR | Description | UM | Type | FB BIT | Def | Min | Max | Acc | Mod |
|---|---|---|---|---|---|---|---|---|---|---|
| **18.4** | **2358** | **Torque limit src** | | LINK | 16/32BIT | 3726 | 0 | 16384 | ERWZ | F_S |

Selection of the origin (source) of the signal to be used for the torque current limit. The signals that can be associated with the function are listed in the "**L_LIM**" selection list.

| Menu | PAR | Description | UM | Type | FB BIT | Def | Min | Max | Acc | Mod |
|---|---|---|---|---|---|---|---|---|---|---|
| **18.5** | **2360** | **Torque climPos Inuse** | A | FLOAT | 16/32BIT | 0.0 | 0.0 | 0.0 | ER | FVS |

The positive torque limit value currently being used is displayed.

| Menu | PAR | Description | UM | Type | FB BIT | Def | Min | Max | Acc | Mod |
|---|---|---|---|---|---|---|---|---|---|---|
| **18.6** | **2362** | **Torque climNeg Inuse** | A | FLOAT | 16/32BIT | 0.0 | 0.0 | 0.0 | ER | FVS |

The negative torque limit value currently being used is displayed.

| Menu | PAR | Description | UM | Type | FB BIT | Def | Min | Max | Acc | Mod |
|---|---|---|---|---|---|---|---|---|---|---|
| **18.7** | **2380** | **Dig torque ref 1** | perc | FLOAT | 16/32BIT | 0.0 | -300.0 | 300.0 | ERW | FVS |

Setting of a digital torque reference. The current reference value is proportional to the active motor current and determines the torque value. The sign determines the torque direction.

| Menu | PAR | Description | UM | Type | FB BIT | Def | Min | Max | Acc | Mod |
|---|---|---|---|---|---|---|---|---|---|---|
| **18.8** | **2382** | **Torque ref 1 src** | | LINK | 16/32BIT | 3104 | 0 | 16384 | ERWZ | F_S |

Selection of the origin (source) of the signal to be used for the torque reference. The signals that can be associated with the function are listed in the "**L_VREF**" selection list.

| Menu | PAR | Description | UM | Type | FB BIT | Def | Min | Max | Acc | Mod |
|---|---|---|---|---|---|---|---|---|---|---|
| **18.9** | **2384** | **Torque ref filter** | ms | FLOAT | | 1.0 | 0.1 | 10.0 | ERW | F_S |

Setting of a  filter on the torque reference.

| Menu | PAR | Description | UM | Type | FB BIT | Def | Min | Max | Acc | Mod |
|---|---|---|---|---|---|---|---|---|---|---|
| **18.10** | **2386** | **Torque ref** | perc | FLOAT | 16/32BIT | 0.0 | 0.0 | 0.0 | ER | F_S |

The value of the torque reference is displayed.

# 19 - VF PARAMETERS

| Menu | PAR | Description | UM | Type | FB BIT | Def | Min | Max | Acc | Mod |
|---|---|---|---|---|---|---|---|---|---|---|
| **19.1** | **2400** | **Voltage flux boost** | perc | FLOAT | | CALCF | 0.0 | 15.0 | RWS | _V_ |

Fixed voltage boost level. Value defined during self-tuning.
The motor flux level is controlled in vector mode. For pure V/f control, set this parameter to zero.
Increase the value slightly in case of low torque at low speed.
Increase the value slightly in case of high current with motor saturation or very long motor cables.

| Menu | PAR | Description | UM | Type | FB BIT | Def | Min | Max | Acc | Mod |
|---|---|---|---|---|---|---|---|---|---|---|
| **19.2** | **2402** | **Voltage boost gain** | V/A | FLOAT | | CALCF | 0.0 | 0.0 | ERWS | _V_ |

Setting of the boost flux magnetising current regulator gain.

| Menu | PAR | Description | UM | Type | FB BIT | Def | Min | Max | Acc | Mod |
|---|---|---|---|---|---|---|---|---|---|---|
| **19.3** | **2404** | **Voltage torque boost** | | ENUM | | Enable | 0 | 1 | ERWZ | _V_ |

Enables vector torque compensation. For pure V/f control, disable this parameter.
**0** Disable
**1** Enable

| Menu | PAR | Description | UM | Type | FB BIT | Def | Min | Max | Acc | Mod |
|---|---|---|---|---|---|---|---|---|---|---|
| **19.4** | **2406** | **Vf voltage** | V | FLOAT | | CALCF | 10.0 | 690.0 | ERWZS | _V_ |

Setting of the maximum voltage value to be applied at the motor terminals (usually set according to the motor data plate).

| Menu | PAR | Description | UM | Type | FB BIT | Def | Min | Max | Acc | Mod |
|---|---|---|---|---|---|---|---|---|---|---|
| **19.5** | **2408** | **Vf frequency** | Hz | FLOAT | | CALCF | 10.0 | 2000.0 | ERWZS | _V_ |

Setting of the motor rated frequency (indicated on the motor data plate)
This is the frequency at which the drive output voltage reaches the maximum output voltage (**Vf voltage**) on the motor.

| Menu | PAR | Description | UM | Type | FB BIT | Def | Min | Max | Acc | Mod |
|---|---|---|---|---|---|---|---|---|---|---|
| **19.6** | **2410** | **Vf voltage 1** | V | FLOAT | | CALCF | CALCF | CALCF | ERWZS | _V_ |

Setting of an intermediate voltage value for the custom V/f characteristic curve.

| Menu | PAR | Description | UM | Type | FB BIT | Def | Min | Max | Acc | Mod |
|---|---|---|---|---|---|---|---|---|---|---|
| **19.7** | **2412** | **Vf frequency 1** | Hz | FLOAT | | CALCF | 0.0 | CALCF | ERWZS | _V_ |

Setting of an intermediate frequency value for the custom V/f characteristic curve.

| Menu | PAR | Description | UM | Type | FB BIT | Def | Min | Max | Acc | Mod |
|---|---|---|---|---|---|---|---|---|---|---|
| **19.8** | **2414** | **Vf voltage 0** | V | FLOAT | | 0.0 | 0.0 | CALCF | ERWZS | _V_ |

Compensation of IR voltage drop at 0 Hz. This parameter must be increased in case of pure V/f control. The increase depends on the size of the motor. Values that are too high could cause an overcurrent and motor saturation.

| Menu | PAR | Description | UM | Type | FB BIT | Def | Min | Max | Acc | Mod |
|---|---|---|---|---|---|---|---|---|---|---|
| **19.9** | **2430** | **Vf shape** | | ENUM | | Linear | 0 | 1 | ERWZS | _V_ |

Selection of the type of V/f characteristic curve
**0** Linear
**1** Custom

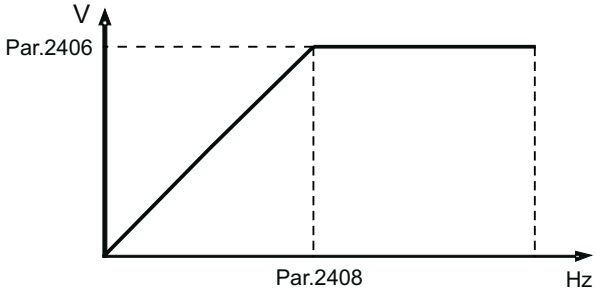


Set **0** (**Linear**) to obtain a linear V/f characteristic curve, on which the intermediate points are reset to a value that is equal to half those of parameters **2406** and **2408**.

The Boost joins the curve automatically.

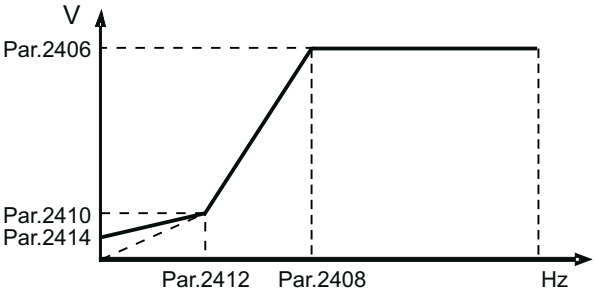


Set **1** (**Custom**) to obtain a customized V/f characteristic curve, in which the intermediate voltage and frequency values are defined by parameters **2410** and **2412**, as is the point at which the Boost joins the characteristic curve.

| Menu | PAR | Description | UM | Type | FB BIT | Def | Min | Max | Acc | Mod |
|---|---|---|---|---|---|---|---|---|---|---|
| **19.10** | **2440** | **Slip comp** | Hz | FLOAT | | CALCF | 0.0 | 10.0 | RWS | _V_ |

Setting of the slip compensation. When the asynchronous motor is loaded, the mechanical speed of the motor shaft varies according to the electric slippage, which affects torque generation. The slip compensation function can be used to maintain a constant motor shaft speed. Compensation is performed by varying the drive output frequency as a function of its output current and the motor parameters. Thus, to obtain the best effect, the motor plate data must be set appropriately, and the correct stator resistance value (Par.2050) must be set or measured using the self-tuning function, The slip compensation value is calculated automatically during the self-tuning procedure or set manually in this parameter.

During slip compensation tuning the drive must not be in the current limit condition.

| Menu | PAR | Description | UM | Type | FB BIT | Def | Min | Max | Acc | Mod |
|---|---|---|---|---|---|---|---|---|---|---|
| **19.11** | **2442** | **Slip comp filter** | ms | UINT16 | | 200 | 50 | 5000 | ERW | _V_ |

Setting of the slip compensation filter. The value set in this parameter determines the slip compensation function reaction time. The lower this parameter is set, the greater the slip compensation reaction. If this parameter is too low, it could cause undesirable oscillations in speed after sudden variations to the applied load.

| Menu | PAR | Description | UM | Type | FB BIT | Def | Min | Max | Acc | Mod |
|---|---|---|---|---|---|---|---|---|---|---|
| **19.12** | **2444** | **Slip comp mode** | | ENUM | | Open loop lift | 0 | 2 | ERWZ | _V_ |

**0** Open loop
**1** Closed loop
**2** Open loop lift

When set to **0** (**Open loop**) the slip compensation value is that set manually in parameter 5210 or calculated by the self-tuning procedure.

If set to **1 (Closed loop**) the slip compensation value is measured by the reading of the signals by a digital encoder keyed to the motor shaft. The relative expansion card must be installed in the drive to acquire the encoder signals. For best results increase the value of PAR 2440 by 5 times.

If set to 2 (lift open loop) the slip compensation value is that set for lift cycle operation.

| Menu | PAR | Description | UM | Type | FB BIT | Def | Min | Max | Acc | Mod |
|---|---|---|---|---|---|---|---|---|---|---|
| **19.13** | **2446** | **Slip P gain** | perc | FLOAT | | 1.0 | 0.0 | 100.0 | ERWS | _V_ |

Setting of the slip compensation proportional gain.

| Menu | PAR | Description | UM | Type | FB BIT | Def | Min | Max | Acc | Mod |
|---|---|---|---|---|---|---|---|---|---|---|
| **19.14** | **2448** | **Slip I gain** | perc | FLOAT | | 1.5 | 0.0 | 100.0 | ERWS | _V_ |

Setting of the slip compensation integral gain.

| Menu | PAR | Description | UM | Type | FB BIT | Def | Min | Max | Acc | Mod |
|---|---|---|---|---|---|---|---|---|---|---|
| **19.15** | **2460** | **Vfcurrent lim P gain** | Hz/A | FLOAT | | CALCF | 0.0 | 1000.0 | ERWS | _V_ |

Setting of the proportional gain limit in SSC mode. This is calculated automatically if the self-tuning procedure is performed.

| Menu | PAR | Description | UM | Type | FB BIT | Def | Min | Max | Acc | Mod |
|---|---|---|---|---|---|---|---|---|---|---|
| **19.16** | **2462** | **Vfcurrent lim I time** | ms | FLOAT | | CALCF | 1.0 | 50.0 | ERWS | _V_ |

Setting of the proportional gain limit in SSC mode. This is calculated automatically if the self-tuning procedure is performed.

| Menu | PAR | Description | UM | Type | FB BIT | Def | Min | Max | Acc | Mod |
|---|---|---|---|---|---|---|---|---|---|---|
| **19.17** | **2470** | **Damping gain** | perc | UINT16 | | 0 | 0 | 100 | ERW | _V_ |

Setting of the damping gain. The parameter is used to eliminate any oscillations or faults in the drive output current, deriving from configurations capable of generating oscillations in the drive/cable/motor system. If oscillations occur, gradually increase the value of this parameter, until they disappear.

| Menu | PAR | Description | UM | Type | FB BIT | Def | Min | Max | Acc | Mod |
|---|---|---|---|---|---|---|---|---|---|---|
| **19.18** | **2472** | **Damping threshold 1** | Hz | INT16 | | 20 | 5 | 100 | ERW | _V_ |

Setting of the first damping gain regulation threshold. These settings are usually effective for intermediate frequencies and make it possible to limit motor oscillations.

| Menu | PAR | Description | UM | Type | FB BIT | Def | Min | Max | Acc | Mod |
|---|---|---|---|---|---|---|---|---|---|---|
| **19.19** | **2474** | **Damping threshold 2** | Hz | INT16 | | 30 | 5 | 100 | ERW | _V_ |

Setting of the second damping gain regulation threshold. These settings are usually effective for intermediate frequencies and make it possible to limit motor oscillations.

| Menu | PAR | Description | UM | Type | FB BIT | Def | Min | Max | Acc | Mod |
|---|---|---|---|---|---|---|---|---|---|---|
| **19.20** | **2480** | **Vf min frequency** | Hz | FLOAT | | 0.5 | 0.2 | 5.0 | ERW | _V_ |

Setting of the minimum frequency in the SSC control mode. This represents the minimum output frequency, below which frequency regulations are ineffective. It is not possible to go below this value, regardless of the reference that has been set.

| Menu | PAR | Description | UM | Type | FB BIT | Def | Min | Max | Acc | Mod |
|---|---|---|---|---|---|---|---|---|---|---|
| **19.21** | **2482** | **Vf min freq delay** | ms | UINT16 | | 800 | 0 | 5000 | ERW | _V_ |

Setting of the delay for the minimum frequency signal in the SSC control mode.

| Menu | PAR | Description | UM | Type | FB BIT | Def | Min | Max | Acc | Mod |
|---|---|---|---|---|---|---|---|---|---|---|
| **19.22** | **2490** | **Dig Vf scale** | | FLOAT | 16/32BIT | 1.0 | 0.0 | 1.0 | ERWZ | _V_ |

Setting of a digital multiplier factor for the drive output voltage in the SSC mode.

| Menu | PAR | Description | UM | Type | FB BIT | Def | Min | Max | Acc | Mod |
|---|---|---|---|---|---|---|---|---|---|---|
| **19.23** | **2492** | **Vf scale src** | | LINK | 16/32BIT | 2490 | 0 | 16384 | ERW | _V_ |

Selection of the origin (source) of the signal to be used to set a multiplier factor for the drive output voltage. The associable functions are listed in the " **"L_VREF**" selection list.

# 20 - FUNCTIONS

## 20.1 - FUNCTIONS/INERTIA COMP

An increase in the dynamic response of the speed regulator to a variation in the reference, can be modified by changing the current value during the acceleration/deceleration phase, to counter the applied machine inertia.

These parameters are calculated by the speed loop autotuning procedure but can also be set manually by the user.

**Nota !** This menu is not displayed if the lift application is active.

| Menu | PAR | Description | UM | Type | FB BIT | Def | Min | Max | Acc | Mod |
|---|---|---|---|---|---|---|---|---|---|---|
| **20.1.1** | **3100** | **Inertia comp** | kgm2 | FLOAT | | 0.0 | 0.0 | 100.0 | ERWS | F_S |

Total value of the inertia on the motor shaft in Kgm² identified during the self-tuning procedure. If known, this value can also be set manually by the user.

| Menu | PAR | Description | UM | Type | FB BIT | Def | Min | Max | Acc | Mod |
|---|---|---|---|---|---|---|---|---|---|---|
| **20.1.2** | **3102** | **Inertia comp filter** | ms | UINT16 | | 30 | 1 | 100 | ERW | F_S |

Setting of a filter on the torque compensation. The filter reduces noise due to speed differentiation in the inertia block.

| Menu | PAR | Description | UM | Type | FB BIT | Def | Min | Max | Acc | Mod |
|---|---|---|---|---|---|---|---|---|---|---|
| **20.1.3** | **3104** | **Inertia comp mon** | perc | FLOAT | 16/32BIT | 0.0 | 0.0 | 0.0 | ER | F_S |

The value of inertia compensation on the function block output is displayed.

| Menu | PAR | Description | UM | Type | FB BIT | Def | Min | Max | Acc | Mod |
|---|---|---|---|---|---|---|---|---|---|---|
| **20.1.4** | **3108** | **Inertia comp mode** | | ENUM | | Internal | 0 | 1 | ERWZ | F_S |

**0** Internal
**1** External

Modalità compensazione inerzia.

## 20.2 - FUNCTIONS/DC BRAKING

The drive is capable of managing a direct current injection phase. During this phase a braking torque is generated that can be used to stop the motor or block the rotor.

The following characteristics can be configured:

- signal used to activate the direct current injection phase
- direct current injection phase activation mode
- delay between activation of request for DC braking and start of direct current injection
- duration of direct current injection phase
- intensity of injected direct current

This function is useful for:

- slowing the motor running at any speed to zero speed
- slowing a motor driven by the load before applying the start command
- keeping the rotor blocked at the end of a deceleration ramp following a stop command.

This function cannot be used for intermediate braking as the motor speed must be brought to zero.

During the direct current injection phase the kinetic energy of the motor is dissipated as heat in the motor.

The following parameters allow complete control of the function.

| Menu | PAR | Description | UM | Type | FB BIT | Def | Min | Max | Acc | Mod |
|---|---|---|---|---|---|---|---|---|---|---|
| **20.2.1** | **3150** | **DC braking cmd src** | | LINK | 16BIT | 3710 | 0 | 16384 | ERW | FVS |

Selection of the origin (source) of the signal to be used for the **DC braking command**. The terminal or signal that can be used for this function can be defined from among those available in the "**L_DIGSEL2**" selection list".

**0** DC **braking command** not enable
**1** DC **braking command** enable

In default conditions the origin of the **DC braking command** signal is 0 .

| Menu | PAR | Description | UM | Type | FB BIT | Def | Min | Max | Acc | Mod |
|---|---|---|---|---|---|---|---|---|---|---|
| **20.2.2** | **3152** | **DC brake mode** | | ENUM | | Spento | 0 | 3 | ERW | FVS |

This parameter can be used to configure the DC braking activation modes.

**0** Off
**1** At Stop
**2** On Command
**3** OnCmd & AtStop

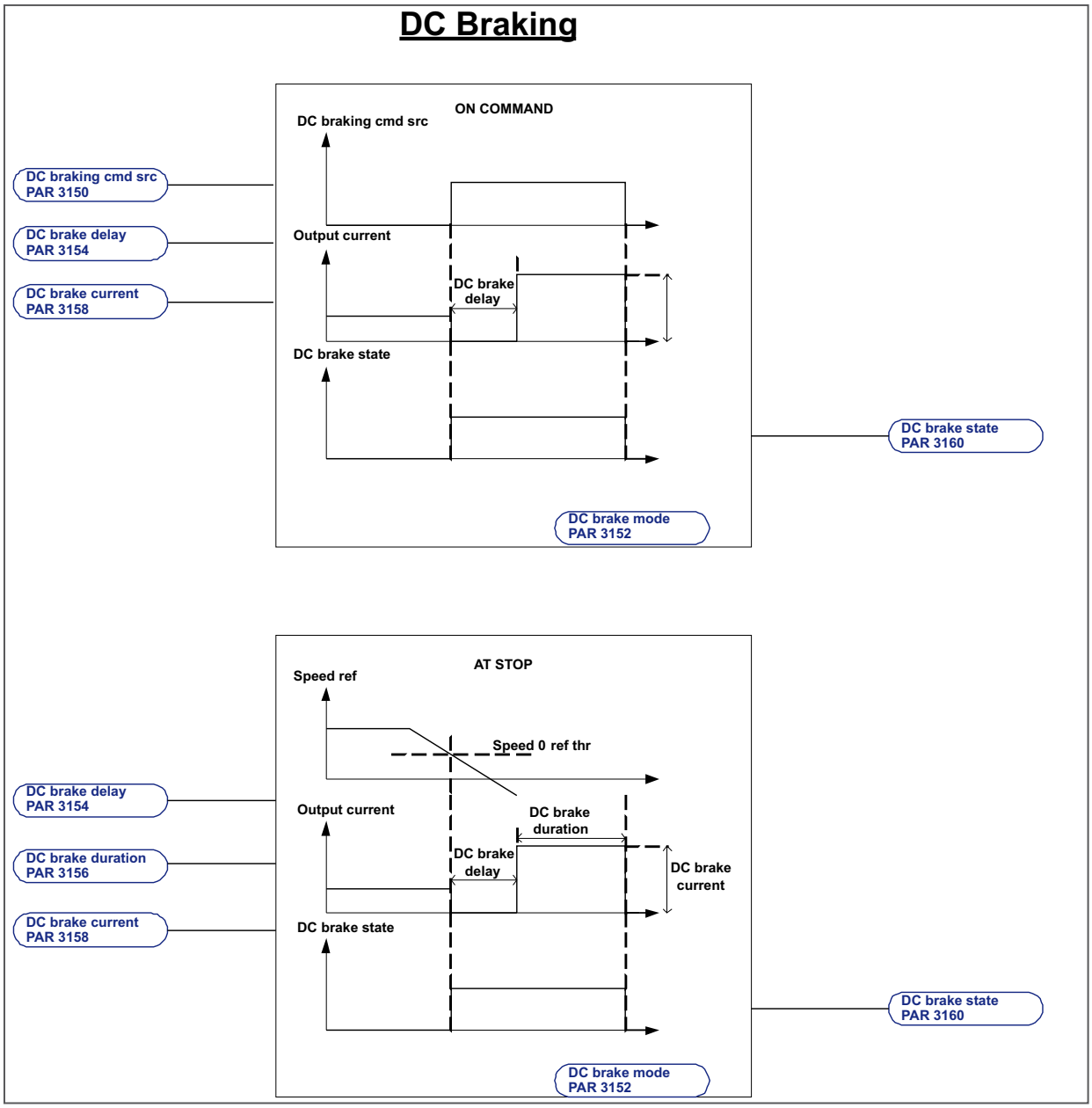


In "**Off**" mode the direct current injection phase is never executed.

In "**At stop**" mode the direct current injection phase is executed when the stop command is sent and the speed reference threshold = zero has been reached.

Example:

With the motor running at any speed, when the stop command is enabled the ramp output decreases according to the selected ramp time, when the speed reference threshold = zero is reached PAR 934 **Reference = 0** the direct current injection phase is enabled. When the command is enabled after the delay configured in PAR 3154 **DC brake delay** direct current injection starts. PAR 3156 **DC brake time** is used to configure the duration of the injection phase and PAR 3158 **DC brake curr** is used to configure the intensity of the injection phase current.

In "**At command**" mode the direct current injection phase is executed when the **DC braking command** configured using parameter PAR 3150 **DC braking command src** is sent.

Example:

Motor running driven by load. When the drive is enabled and the **DC braking command** is sent the direct current injection phase is activated. When the command is enabled after the delay configured in PAR 3154 **DC brake delay** direct current injection starts. PAR 3156 **DC brake time** is used to configure the duration of the injection phase and PAR 3158 **DC brake curr** is used to configure the intensity of the injection phase current.

If the command is an impulse shorter than the time programmed with PAR 3156 **DC brake time**, the direct current injection phase continues at least for the time set in parameter **DC brake time**.

If the command is an impulse longer than the time programmed with 3156 **DC brake time**, the direct current injection phase continues for as long as the command is present.

In "**OnCmd & AtStop**" modes the direct current injection phase is executed when one of the two conditions described in the "**At stop**" or "**On command**" modes is present

| Menu | PAR | Description | UM | Type | FB BIT | Def | Min | Max | Acc | Mod |
|---|---|---|---|---|---|---|---|---|---|---|
| **20.2.3** | **3154** | **DC brake delay** | s | FLOAT | | 0.0 | 0.00 | 30.0 | ERW | FVS |

This parameter is used to configure the delay in seconds between the moment DC braking is requested and the moment direct current injection starts.

This delay enables the motor to demagnetize, and thus avoid an overcurrent due to the electromotive force of the motor (e.f.m.).

| Menu | PAR | Description | UM | Type | FB BIT | Def | Min | Max | Acc | Mod |
|---|---|---|---|---|---|---|---|---|---|---|
| **20.2.4** | **3156** | **DC brake duration** | s | FLOAT | | 1.0 | 0.01 | 30.0 | ERW | FVS |

This parameter is used to configure the duration of direct current injection in the stator windings.

| Menu | PAR | Description | UM | Type | FB BIT | Def | Min | Max | Acc | Mod |
|---|---|---|---|---|---|---|---|---|---|---|
| **20.2.5** | **3158** | **DC brake current** | perc | FLOAT | | 75.0 | 0.0 | 150.0 | ERW | FVS |

This parameter is used to configure the value of the injected direct current.

This is expressed as a percentage of the rated current of the motor at full load (par. 488 **Drive cont current**).

| Menu | PAR | Description | UM | Type | FB BIT | Def | Min | Max | Acc | Mod |
|---|---|---|---|---|---|---|---|---|---|---|
| **20.2.6** | **3160** | **DC brake state** | | ENUM | 16BIT | Non attivo | 0 | 1 | ER | FVS |

The status of direct current braking is displayed.

**0** Not active
**1** Active

***Note!*** During braking the **Enable** command must be enabled. If this command is not present or is removed during the braking process, the drive blocks the inverter bridge and the motor stops due to inertia, without braking.

During the direct current injection phase the **Run** command should not be enabled. If the **Run** command is sent to the drive, the ramp output starts following the set reference; direct current output is produced in any case. The moment the **DC braking command** is removed there is immediately a speed step without performing a change in the ramp.

During the direct current injection phase, for the Jog command follow the instructions provided for the Run command.

## 20.3 - FUNCTIONS/MOTOR OVERLOAD

The overload control function provides integrator logic to protect the motor against thermal overload. This protection presents the characteristic $I^2t$ behaviour and is an emulation of the thermal relay of the motor controlled by the ADL300 drive.

| Menu | PAR | Description | UM | Type | FB BIT | Def | Min | Max | Acc | Mod |
|---|---|---|---|---|---|---|---|---|---|---|
| **20.3.1** | **3200** | **Motor ovld enable** | | BIT | | 0 | 0 | 1 | ERW | FVS |

Enabling of the motor overload control.

| Menu | PAR | Description | UM | Type | FB BIT | Def | Min | Max | Acc | Mod |
|---|---|---|---|---|---|---|---|---|---|---|
| **20.3.2** | **3202** | **Motor ovld factor** | perc | FLOAT | | 150.0 | 100.0 | 300.0 | ERWS | FVS |

Setting of the motor overload value. Percentage value of the motor rated current (par. **2002 Rated current**).

| Menu | PAR | Description | UM | Type | FB BIT | Def | Min | Max | Acc | Mod |
|---|---|---|---|---|---|---|---|---|---|---|
| **20.3.3** | **3204** | **Motor ovld time** | s | FLOAT | | 30.0 | 10.0 | 300.0 | ERWS | FVS |

Setting of the motor overload duration in seconds. It represents the moment in which the protection ("Motor Overload") is enabled, if the motor current value is above the overload set in the **Motor ovld factor** parameter. This alarm can be assigned to a programmable digital output (**Motor overload trip**).

The trip time depends on the motor current value and is as follows:

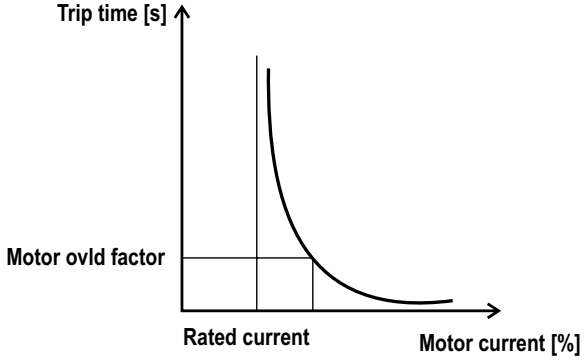


| Menu | PAR | Description | UM | Type | FB BIT | Def | Min | Max | Acc | Mod |
|---|---|---|---|---|---|---|---|---|---|---|
| **20.3.4** | **3206** | **Motor service factor** | perc | FLOAT | | 100.0 | 25.0 | 200.0 | ERWS | FVS |

Setting of the motor service factor. This is the difference between the peak current and rated current. It is used to calculate the thermal image of the motor.

| Menu | PAR | Description | UM | Type | FB BIT | Def | Min | Max | Acc | Mod |
|---|---|---|---|---|---|---|---|---|---|---|
| **20.3.5** | **3216** | **Motor fan type** | | ENUM | | Servo fan | 0 | 1 | ERW | FVS |

This parameter is used to set the type of motor cooling system.

**0** Auto fan

**1** Servo fan

**Auto fan** indicates the presence of a fan unit mounted on the motor shaft that therefore turns at a speed proportional to the motor speed. Cooling is not very effective at low motor speeds.

**Servo fan** indicates the presence of an independent fan unit that therefore always runs at the rated speed. It ensures optimum cooling efficiency at all motor speeds.

When the current motor speed is below (PAR 2004 **Rated speed** / 2) and PAR 3216 **Motor fan type** = Auto fan; , the MOTOR OVERLOAD protection intervention time must be reduced as cooling is insufficient.

At below (PAR 2004 **Rated speed** / 2) the protection intervention time is reduced by reducing the direct current of the MOTOR OVERLOAD function.

When the motor speed is equal to (PAR 2004 **Rated speed** / 2) the direct current of the MOTOR OVERLOAD function is equal to PAR 2002 **Rated current** * PAR 3206 **Motor service factor**, , whereas below that limit it is modified following a linear pattern until PAR 2002 **Rated current** * 3206 **Motor service factor** * PAR 3218 **Motor derat factor** when the motor speed reaches zero.

The overload current of the MOTOR OVERLOAD function is obtained by PAR 2002 **Rated current** * 3206 **Motor service factor** * PAR 3202 **Motor ovld factor** and is the maximum current that can circulate in the motor. If the MOTOR OVERLOAD function is enabled the drive automatically sets the torque current limit so that Iout max. does not exceed this value.

With the MOTOR OVERLOAD function a current equal to the Overload level is supplied to the motor for the maximum time set in PAR 3204 **Motor ovld time**, The slower the motor speed, the shorter the time allowed (see figure at beginning of chapter).

After the set time, the MOTOR OVERLOAD function automatically sets the torque current limit so that Iout max. does not exceed the direct current of the MOTOR OVERLOAD function.

When the motor current speed exceeds (PAR 2004 **Rated speed** / 2) and PAR 3216 **Motor fan type** = Auto fan, the direct current is not reduced as cooling is sufficient.

When PAR 3216 **Motor fan type** = Servo fan, the direct current is not reduced as cooling is sufficient.

| Menu | PAR | Description | UM | Type | FB BIT | Def | Min | Max | Acc | Mod |
|---|---|---|---|---|---|---|---|---|---|---|
| **20.3.6** | **3218** | **Motor derat factor** | perc | FLOAT | | 50.0 | 0.0 | 100.0 | ERWS | FVS |

This parameter is used to set the derating factor. The value is expressed as a percentage of PAR 2002 **Rated current** * PAR 3206 **Motor service factor**.

When the current motor speed is below (PAR 2004 **Rated speed** / 2) and PAR 3216 **Motor fan type** = Auto fan, the protection intervention time must be reduced as cooling is insufficient.

At below (PAR 2004 **Rated speed** / 2) sthe protection intervention time is reduced by reducing the direct current of the MOTOR OVERLOAD function.

When the motor speed is equal to (PAR 2004 **Rated speed** / 2) ) the direct current of the MOTOR OVERLOAD function is equal to PAR 2002 **Rated current** * PAR 3206 **Motor service factor**, whereas below that limit it is modified following a linear pattern until PAR 2002 **Rated current** * PAR 3206 **Motor service factor** * PAR 3218 **Motor derat factor** when the motor speed reaches zero.

The overload current of the MOTOR OVERLOAD function is obtained by PAR 2002 **Rated current** * PAR 3206 **Motor service factor** * PAR 3202 **Motor ovld factor** and is the maximum current that can circulate in the motor. If the MOTOR OVERLOAD function is enabled the drive automatically sets the torque current limit so that Iout max. does not exceed this value.

With the MOTOR OVERLOAD function a current equal to the Overload level is supplied to the motor for the maximum time set in PAR 3204 **Motor ovld time**, The slower the motor speed, the shorter the time allowed (see graphs).

After the set time, the MOTOR OVERLOAD function automatically sets the torque current limit so that Iout max. does not exceed the direct current of the MOTOR OVERLOAD function.

When the motor current speed exceeds (PAR 2004 **Rated speed** / 2) and PAR 3216 **Motor fan type** = Auto fan, the direct current is not reduced as cooling is sufficient.

When PAR 3216 **Motor fan type** = Servo fan, the direct current is not reduced as cooling is sufficient.

If the value of parameter 3202 **Motor ovld factor** is 100 % the overload current of the Motor Overload function is equal to the continuous current of the Motor Overload function. In this case the drive behaves as if the overload cycle has been executed and so sets the torque current limit so that Iout max is not more than the continuous current, i.e. **Rated current** (PAR 2002) * **Motor service factor** (PAR 3206) * **Motor derat factor** (PAR 3218).

We recommend setting parameter 3218 **Motor derat factor** to a value so that **Rated current** (PAR 2002) * **Motor service factor** (PAR 3206) * **Motor derat factor** (PAR 3218) produces a result that is more than the motor magnetisation current.

## 20.4 - FUNCTIONS/BRES OVERLOAD

| Menu | PAR | Description | UM | Type | FB BIT | Def | Min | Max | Acc | Mod |
|---|---|---|---|---|---|---|---|---|---|---|
| **20.4.1** | **3250** | **Bres control** | | BIT | | 1 | 0 | 1 | ERWZ | FVS |
| | | Enabling of the external braking resistance and relative overload control. | | | | | | | | |

| Menu | PAR | Description | UM | Type | FB BIT | Def | Min | Max | Acc | Mod |
|---|---|---|---|---|---|---|---|---|---|---|
| **20.4.2** | **3252** | **Bres value** | ohm | FLOAT | | SIZE | 7.0 | 1000.0 | ERWS | FVS |
| | | Setting of the ohm value of the external braking resistor | | | | | | | | |

| Menu | PAR | Description | UM | Type | FB BIT | Def | Min | Max | Acc | Mod |
|---|---|---|---|---|---|---|---|---|---|---|
| **20.4.3** | **3254** | **Bres cont power** | kW | FLOAT | | SIZE | 0.1 | 100.0 | ERWS | FVS |
| | | Setting of the power that can be continuously dissipated by the external braking resistor. | | | | | | | | |

| Menu | PAR | Description | UM | Type | FB BIT | Def | Min | Max | Acc | Mod |
|---|---|---|---|---|---|---|---|---|---|---|
| **20.4.4** | **3256** | **Bres overload factor** | | FLOAT | | SIZE | 1.5 | 10.0 | ERWS | FVS |
| | | Setting of the external resistor overload factor. | | | | | | | | |

| Menu | PAR | Description | UM | Type | FB BIT | Def | Min | Max | Acc | Mod |
|---|---|---|---|---|---|---|---|---|---|---|
| **20.4.5** | **3258** | **Bres overload time** | s | FLOAT | | SIZE | 0.5 | 50.0 | ERWS | FVS |
| | | Setting of the intervention time of the external braking resistor overload. | | | | | | | | |

# 20.5 - FUNCTIONS/DOUBLE PAR SET

Two independent sets of parameters can be stored in the ADL300 drive. These can be selected via the keypad or by using an external command.

This makes it possible to change all the drive parameters quickly and automatically according to the various operating requirements. For example, two motors with different characteristics can be controlled alternately.

**Lift application parameters are not included in the two sets of parameters.** This makes it possible to switch between all drive parameters in two separate groups, while having a single set of parameters for the application.

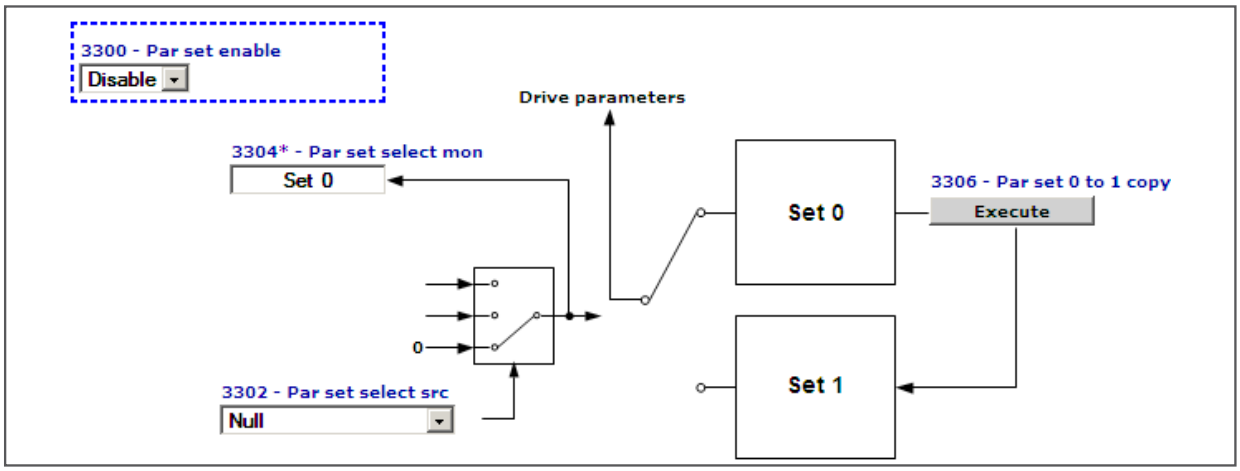


| Menu | PAR | Description | UM | Type | FB BIT | Def | Min | Max | Acc | Mod |
|---|---|---|---|---|---|---|---|---|---|---|
| **20.5.1** | **3300** | **Par set enable** | | ENUM | | Disable | 0 | 1 | ERW | FVS |

Enabling of management of two parameter sets
**0** Disable
**1** Enable

When set to **0** only one parameter set is managed (the one used as the default set).

If set to **1** two separate parameter sets can be configured. These can be selected using a command signal on a digital input of the terminal strip.

| Menu | PAR | Description | UM | Type | FB BIT | Def | Min | Max | Acc | Mod |
|---|---|---|---|---|---|---|---|---|---|---|
| **20.5.2** | **3302** | **Par set select src** | | LINK | 16BIT | 6000 | 0 | 16384 | ERWZ | FVS |

Selection of the origin (source) of the signal to be used to select the parameter set to be used. The terminal or digital command that can be associated with this function can be selected from among those available in the “L_DIGSEL2” selection list.

| Menu | PAR | Description | UM | Type | FB BIT | Def | Min | Max | Acc | Mod |
|---|---|---|---|---|---|---|---|---|---|---|
| **20.5.3** | **3304** | **Par set select mon** | | ENUM | 16BIT | Set 0 | 0 | 0 | ER | FVS |

The parameter set currently in use is displayed.
**0** Set 0
**1** Set 1

| Menu | PAR | Description | UM | Type | FB BIT | Def | Min | Max | Acc | Mod |
|---|---|---|---|---|---|---|---|---|---|---|
| **20.5.4** | **3306** | **Par set 0 to 1 copy** | | | BIT | 0 | 0 | 1 | ERWZ | FVS |

**<u>Procedures for setting up and managing the double parameter set</u>**

**Creating the second set:**

This function copies parameter set 0 onto set 1. Before enabling management of the double parameter set, the first set should be programmed with the correct values.

When the first set is ready, the second can be activated as follows:

**1** Activate management of the double parameter set by enabling parameter **3300 Par set enable**.
**2** Copy set 0 onto set 1 using command **3306 Par set 0 to 1 copy**.
This creates an initial parameter base in set 1 to which changes can be made.
Save the parameters.
**3** Activate set 1 using parameter **3302 Par set select src**.

To select set 1 manually, set this parameter to “**One**”.
Otherwise select the desired source.

4 Modify the parameters in set 1 as necessary.
5 Save the parameters.

You can change the set being used by changing the source selected in parameter **3302 Par set select src**. This can only be changed with the drive disabled.

When the double parameter set is active, the number of the set being used is shown next to the number of each parameter on the keypad.

**Modifying and saving parameters:**

When the double parameter set is active, any parameters that need to be the same in the two sets must be modified in each set separately.

Parameters are only saved in the set that is active at the time. To save both sets, you must first save one and then select and save the other.

**Note!** Any changes to the parameters regarding the “parameter sets”, performed when enabled, will be lost at the next switching unless a Par set 0 to 1 copy command is sent.

To save data permanently (even when the drive is switched off), send the Save parameters command (DRIVE CONFIG menu).

## 20.6 - FUNCTIONS/SPEED CAPTURE

**Note!** This menu is not displayed if the lift application is enabled

## 20.7 - FUNCTIONS/COMPARE

This function allows the comparison among two signals or values.

| Menu | PAR | Description | UM | Type | FB BIT | Def | Min | Max | Acc | Mod |
|---|---|---|---|---|---|---|---|---|---|---|
| **20.7.1** | **3650** | **Dig compare input 1** | perc | FLOAT | 32BIT | 0.0 | -200.0 | 200.0 | ERW | FVS |

Setting of the digital value of the first element of comparison.

| Menu | PAR | Description | UM | Type | FB BIT | Def | Min | Max | Acc | Mod |
|---|---|---|---|---|---|---|---|---|---|---|
| **20.7.2** | **3652** | **Dig compare input 2** | perc | FLOAT | 32BIT | 0.0 | -200.0 | 200.0 | ERW | FVS |

Setting of the digital value of the second element of comparison.

| Menu | PAR | Description | UM | Type | FB BIT | Def | Min | Max | Acc | Mod |
|---|---|---|---|---|---|---|---|---|---|---|
| **20.7.3** | **3660** | **Compare input 1 src** | | LINK | 32BIT | 3650 | 0 | 16384 | ERW | FVS |

Selection of the origin (source) of the signal to be used as the first term of comparison. The values that can be selected in the compare function are listed in the “**L_CMP**” selection list.

| Menu | PAR | Description | UM | Type | FB BIT | Def | Min | Max | Acc | Mod |
|---|---|---|---|---|---|---|---|---|---|---|
| **20.7.4** | **3662** | **Compare input 2 src** | | LINK | 32BIT | 3652 | 0 | 16384 | ERW | FVS |

Selection of the origin (source) of the signal to be used as the second term of comparison. The values that can be selected in the compare function are listed in the “**L_CMP**” selection list.

| Menu | PAR | Description | UM | Type | FB BIT | Def | Min | Max | Acc | Mod |
|---|---|---|---|---|---|---|---|---|---|---|
| **20.7.5** | **3670** | **Compare function** | | ENUM | | Nessuna | 0 | 8 | ERW | FVS |

Setting of the compare function between **Compare input 2** and **Compare input 1** to enable **Cmp output.**

**0** None
**1** Inp1=Inp2
**2** Inp1!=Inp2
**3** Inp1<Inp2

**4** Inp1>Inp2
**5** |Inp1|=|Inp2|
**6** |Inp1|!=|Inp2|
**7** |Inp1|<|Inp2|
**8** |Inp1|>|Inp2|

If set to **0** the comparator is not enabled

If set to **1** the comparator output is enabled when the value of **Dig compare input 1** is inside the window resulting from the value of **Dig compare input 2** ± the tolerance set via the **Comparator Window**.

If set to **2** the comparator output is enabled when the value of **Dig compare input 1** is not inside the window resulting from the value of **Dig compare input 2** ± the tolerance set via the **Comparator Window**.

If set to **3** the comparator output is enabled when **Compare input 1** is less than **Compare input 2**.

If set to **4** the comparator output is enabled when **Compare input 1** is greater than **Compare input 2**.

If set to **5** the comparator output is enabled when the value of **Dig compare input 1** is inside the window resulting from the absolute value of **Dig compare input 2** ± the tolerance set via the **Comparator Window**.

If set to **6** the comparator output is enabled when the absolute value of **Dig compare input 1** is not inside the window resulting from the absolute value of **Dig compare input 2** ± the tolerance set via the **Comparator Window**.

If set to **7** the comparator output is enabled when the absolute value of **Dig compare input 1** is less than the absolute value of **Dig compare input 2**.

If set to **8** the comparator output is enabled when the absolute value of **Digital compar inp1** is more than the absolute value of **Digital compar in2.**

| Menu | PAR | Description | UM | Type | FB BIT | Def | Min | Max | Acc | Mod |
|---|---|---|---|---|---|---|---|---|---|---|
| **20.7.6** | **3672** | **Compare window** | perc | FLOAT | | 0.0 | 0.0 | 100.0 | ERW | FVS |

Setting of the tolerance window for comparing the **Compare input 1** and **Compare input 2** signals.

| Menu | PAR | Description | UM | Type | FB BIT | Def | Min | Max | Acc | Mod |
|---|---|---|---|---|---|---|---|---|---|---|
| **20.7.7** | **3674** | **Compare delay** | s | FLOAT | | 0.0 | 0.0 | 30.0 | ERW | FVS |

Setting of the delay for signalling the result of the comparison.

| Menu | PAR | Description | UM | Type | FB BIT | Def | Min | Max | Acc | Mod |
|---|---|---|---|---|---|---|---|---|---|---|
| **20.7.8** | **3676** | **Compare output** | | BIT | 16BIT | 0 | 0 | 1 | ER | FVS |

The status of the comparator output is displayed:
**0** The result of the set comparison is negative
**1** The result of the set comparison is positive

## 20.8 - FUNCTIONS/PADS

The general variables are used to exchange data between the various components of a Bus system. They are similar to the variables of a PLC. Pads can be used, for example, to send information from a fieldbus to an optional card. All Pads can be read and written.

| Menu | PAR | Description | UM | Type | FB BIT | Def | Min | Max | Acc | Mod |
|---|---|---|---|---|---|---|---|---|---|---|
| **20.8.1** | **3700** | **Lift enable** | | INT32 | 32BIT | 0 | 0 | 0 | ERW | FVS |
| **20.8.2** | **3702** | **Run cont mon** | | INT32 | 32BIT | 0 | 0 | 0 | ERW | FVS |
| **20.8.3** | **3704** | **Up cont mon** | | INT32 | 32BIT | 0 | 0 | 0 | ERW | FVS |
| **20.8.4** | **3706** | **Down cont mon** | | INT32 | 32BIT | 0 | 0 | 0 | ERW | FVS |
| **20.8.5** | **3708** | **Brake cont mon** | | INT32 | 32BIT | 0 | 0 | 0 | ERW | FVS |
| **20.8.6** | **3710** | **Lift dc brake** | | INT32 | 32BIT | 0 | 0 | 0 | ERW | FVS |
| **20.8.7** | **3712** | **Brake 2 mon** | | INT32 | 32BIT | 0 | 0 | 0 | ERW | FVS |
| **20.8.8** | **3714** | **Door open mon** | | INT32 | 32BIT | 0 | 0 | 0 | ERW | FVS |
| **20.8.9** | **3716** | **Lift start** | | INT32 | 32BIT | 0 | 0 | 0 | ERW | FVS |
| **20.8.10** | **3718** | **Pad 10** | | INT32 | 32BIT | 0 | 0 | 0 | ERW | FVS |
| **20.8.11** | **3720** | **Lift status word** | | INT32 | 32BIT | 0 | 0 | 0 | ERW | FVS |
| **20.8.12** | **3722** | **Pad 12** | | INT32 | 32BIT | 0 | 0 | 0 | ERW | FVS |
| **20.8.13** | **3724** | **Pad 13** | | INT32 | 32BIT | 0 | 0 | 0 | ERW | FVS |
| **20.8.14** | **3726** | **Ramp down limit** | | INT32 | 32BIT | 0 | 0 | 0 | ERW | FVS |
| **20.8.15** | **3728** | **PAD 15** | | INT32 | 32BIT | 0 | 0 | 0 | ERW | FVS |

| | | | | | | | | | |
|---|---|---|---|---|---|---|---|---|---|
| **20.8.16** | **3730** | **Lift wdec input** | INT32 | 32BIT | 0 | 0 | 0 | ERW | FVS |

Setting of general, 32 Bit variables. PAD parameters can be used as supporting parameters to send values written by the fieldbus, serial line, etc. to analog or digital outputs.

## 20.9 - FUNCTIONS/DIRECTION COUNT

The “Change ride direction count” function monitors usage of the ropes or belts, signals when maintenance/replacement is needed, and locks the lift if limits of usage are reached. This function is reserved to lift maintenance personnel and is protected by a specific password.

Rope usage is typically measured in “changes of direction”: the maximum number is specified on a certificate supplied by the rope manufacturer.

A specific counter keeps count of direction changes and can be reset when the ropes are replaced.

The following signals, inserted in the L_DIGSEL1 selection list, can be brought to a digital output: PAR 3420 **Ropes change req mon**, PAR 3422 **Direction change mon** and PAR 3424 **Dir change cnt zero**.

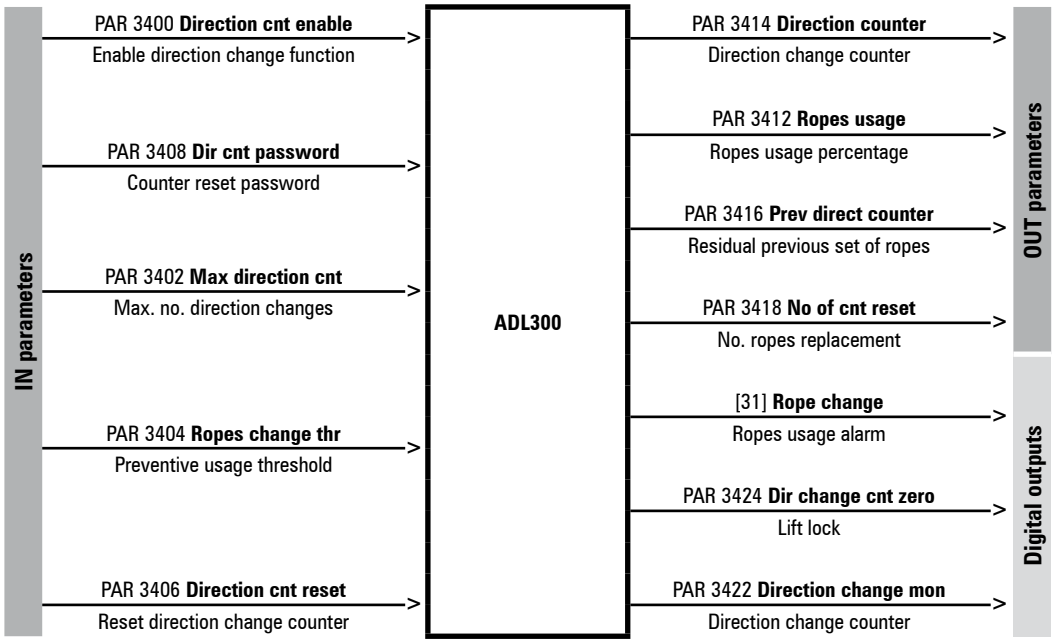


.

*Importante!*

**Firmware update**

To keep them from being overwritten when using Gefran eXpress, these parameters are not updated with the **Write all target parameters** operation.

**Replacing the drive**

If the drive is replaced, you can save the configuration of the “Direction change count” function on the keypad (PAR 3434 **Save to keypad**) and load it on the new drive (PAR 3436 **Load from keypad**).

**Password**

All of the parameters of this function, reserved to lift maintenance personnel, are protected by a specific password.

The password is managed via parameters PAR 3408 **Dir cnt password** and PAR 3410 **Dir cnt new password**.

| Menu | PAR | Description | UM | Type | FB BIT | Def | Min | Max | Acc | Mod |
|---|---|---|---|---|---|---|---|---|---|---|
| **20.9.1** | **3400** | **Direction cnt enable** | | **ENUM** | | **Disable** | **0** | **1** | **ERW** | FVS |

**0** Disable
**1** Enable

Enables the “Direction change count” function.

| Menu | PAR | Description | UM | Type | FB BIT | Def | Min | Max | Acc | Mod |
|---|---|---|---|---|---|---|---|---|---|---|
| **20.9.2** | **3402** | **Max direction cnt** | | **UINT32** | | **0** | **0** | 2147483647 | **ERW** | FVS |

Sets the maximum allowed number of direction changes.

| Menu | PAR | Description | UM | Type | FB BIT | Def | Min | Max | Acc | Mod |
|---|---|---|---|---|---|---|---|---|---|---|
| **20.9.3** | **3404** | **Ropes change thr** | **perc** | **UINT16** | | **0** | **0** | **100** | **ERW** | FVS |

Sets a usage threshold beyond which the “Rope change” alarm is signalled to indicate that the ropes have to be replaced.

When parameter 3412 **Ropes usage** exceeds this threshold, the drive keeps running but the alarm stays on to remind the operator to replace the ropes.

| Menu | PAR | Description | UM | Type | FB BIT | Def | Min | Max | Acc | Mod |
|---|---|---|---|---|---|---|---|---|---|---|
| **20.9.4** | **3406** | **Direction cnt reset** | | **ENUM** | | **Disable** | **0** | **1** | **ERW** | FVS |

**0** Disable
**1** Enable

Let you run a reset to return the direction change counter to the initial value of parameter 3402 **Max direction cnt** (value set by rope manufacturer).

This operation is password-protected and must be run when the ropes are changed.

Executing this command causes the following:

1. the value of counter 3414 **Direction counter** is copied to parameter 3416 **Prev direct counter**,
2. the value of parameter 3414 **No of cnt reset** is incremented,
3. counter 3414 **Direction counter** is reset to value 3402 **Max direction cnt** and consequently parameter 3412 **Ropes usage** is reset to 0.

| Menu | PAR | Description | UM | Type | FB BIT | Def | Min | Max | Acc | Mod |
|---|---|---|---|---|---|---|---|---|---|---|
| **20.9.5** | **3408** | **Dir cnt password** | | **UINT16** | | **0** | **0** | **9999** | **ERW** | FVS |

This parameter is used to enter the password (max 4 numbers) to protect the “Direction change count” menu. The password is displayed only when it is entered; when not in this mode the display shows 0.

When the password has been entered, you can change it by entering a new one in PAR 3410 **Dir cnt new password**..

*Importante!*

The password is not reset when reloading default parameters and is also maintained when updating firmware.

**Attention: <u>if you forget the password you have to contact Gefran Technical Service.</u>**

| Menu | PAR | Description | UM | Type | FB BIT | Def | Min | Max | Acc | Mod |
|---|---|---|---|---|---|---|---|---|---|---|
| **20.9.6** | **3410** | **Dir cnt new password** | | **UINT16** | | **0** | **0** | **9999** | **ERW** | FVS |

This parameter lets you change the password to replace the one entered in par 3408 **Dir cnt password**.

A combination of a maximum of 4 numbers is allowed. To access this parameter, you have to enable the menu by entering the old password in PAR 3408.

The password must be entered twice to be enabled.

| Menu | PAR | Description | UM | Type | FB BIT | Def | Min | Max | Acc | Mod |
|---|---|---|---|---|---|---|---|---|---|---|
| **20.9.7** | **3412** | **Ropes usage** | **perc** | **UINT16** | **16BIT** | **0** | **0** | **0** | **ER** | FVS |

Displays the ropes usage counter (as percentage) of parameter 3402 **Max direction cnt**.

When PAR 3412 = 100% (corresponds to PAR 3414 = 0), the ropes have reached their useful life and must be replaced: the drive finishes the current travel and then locks.

By switching the drive off and back on you can run a single travel to bring the car to a better position for the procedure.

To eliminate the lock condition, reset the direction change counter.

| Menu | PAR | Description | UM | Type | FB BIT | Def | Min | Max | Acc | Mod |
|---|---|---|---|---|---|---|---|---|---|---|
| **20.9.8** | **3414** | **Direction counter** | | **UINT32** | **32BIT** | **0** | **0** | **0** | **ER** | FVS |

Displays the countdown of direction changes remaining until useful life of the ropes is reached.

When PAR 3414 = “0” the ropes must be replaced (corresponds to PAR 3412 = 100%): the drive finishes the current travel and then locks.

By switching the drive off and back on you can run a single travel to bring the car to a better position for the procedure.

To eliminate the lock condition, reset the direction change counter (see PAR 3406 **Direction cnt reset**).

| Menu | PAR | Description | UM | Type | FB BIT | Def | Min | Max | Acc | Mod |
|---|---|---|---|---|---|---|---|---|---|---|
| **20.9.9** | **3416** | **Prev direct counter** | | **UINT32** | **32BIT** | **0** | **0** | **0** | **ER** | FVS |

Displays the number of direction changes remaining on the previous set of ropes (value of PAR 3414 **Direction counter** is copied before reset). This number will remain fixed until the next replacement of the ropes.

| Menu | PAR | Description | UM | Type | FB BIT | Def | Min | Max | Acc | Mod |
|---|---|---|---|---|---|---|---|---|---|---|
| **20.9.10** | **3418** | **No of cnt reset** | | **UINT32** | **32BIT** | **0** | **0** | **0** | **ER** | FVS |

Displays the number of rope changes made.

| Menu | PAR | Description | UM | Type | FB BIT | Def | Min | Max | Acc | Mod |
|---|---|---|---|---|---|---|---|---|---|---|
| **20.9.11** | **3420** | **Ropes change req mon** | | **BIT** | **16BIT** | **0** | **0** | **1** | **ER** | FVS |

Activates when the percentage of rope usage (set in PAR 3412 **Ropes usage**) exceeds the set threshold (PAR 3404 **Ropes change thr**).

This signal is inserted in the L_DIGSEL1 selection list and can be brought to a digital output.

| Menu | PAR | Description | UM | Type | FB BIT | Def | Min | Max | Acc | Mod |
|---|---|---|---|---|---|---|---|---|---|---|
| **20.9.12** | **3434** | **Save to keypad** | | **BIT** | | **0** | **0** | **1** | **ERWZ** | FVS |

Lets you save the configuration of the “Direction change count” function on the keypad.

The set of parameters is saved in a dedicated area on the keypad, separate from that of the other parameters (PAR 590 **Save par to keypad**).

| Menu | PAR | Description | UM | Type | FB BIT | Def | Min | Max | Acc | Mod |
|---|---|---|---|---|---|---|---|---|---|---|
| **20.9.13** | **3436** | **Load from keypad** | | **BIT** | | **0** | **0** | **1** | **ERWZ** | FVS |

Lets you load the configuration of the “Direction change count” function saved on the keypad with PAR 3434 **Save to keypad** on the new drive.

# 21 - COMMUNICATION

## 21.1 - COMMUNICATION/RS232

The ADL300 drive is provided with a standard port (9 pole sub-D connector: XS) for connecting the RS232 serial line used for drive-PC point-to-point communication (via the GF-eXpress configuration software).

| Menu | PAR | Description | UM | Type | FB BIT | Def | Min | Max | Acc | Mod |
|---|---|---|---|---|---|---|---|---|---|---|
| **21.1.1** | **3800** | **Drive address** | | UINT16 | | 1 | 1 | 255 | ERW | FVS |

Setting of the address to which the drive responds when connected to the RS232 serial line.

| Menu | PAR | Description | UM | Type | FB BIT | Def | Min | Max | Acc | Mod |
|---|---|---|---|---|---|---|---|---|---|---|
| **21.1.2** | **3802** | **Serial baudrate** | | ENUM | | 38400 | 0 | 2 | ERW | FVS |

Setting of the RS232 serial communication speed (Baud Rate).
**0** 9600
**1** 19200
**2** 38400

| Menu | PAR | Description | UM | Type | FB BIT | Def | Min | Max | Acc | Mod |
|---|---|---|---|---|---|---|---|---|---|---|
| **21.1.3** | **3810** | **Serial parameter** | | ENUM | | None,8,1 | 0 | 3 | ERW | FVS |

Setting of the format of the RS232 serial line.
**0** None,8,1
**1** None,8,2
**2** Even,8,1
**3** Odd,8,1

| Menu | PAR | Description | UM | Type | FB BIT | Def | Min | Max | Acc | Mod |
|---|---|---|---|---|---|---|---|---|---|---|
| **21.1.4** | **3804** | **Serial protocol** | | ENUM | | Modbus | 0 | 1 | ERW | FVS |

Setting of the serial communication protocol:
**0** Modbus
**1** Jbus

Setting to **0** selects the Modbus RTU (Remote Terminal Unit) serial communication protocol.

Setting to **1** selects the Jbus serial communication protocol. The Jbus protocol is functionally identical to the Modbus, except for the different numbering of addresses: in the Modbus these start from zero (0000 = 1st address) while in the JBUS they start from one (0001 = 1st address) and maintain this difference throughout numbering.

| Menu | PAR | Description | UM | Type | FB BIT | Def | Min | Max | Acc | Mod |
|---|---|---|---|---|---|---|---|---|---|---|
| **21.1.5** | **3806** | **Serial delay** | ms | UINT16 | | 0 | 0 | 1000 | ERW | FVS |

Setting of the minimum delay between the drive receiving the last byte and starting its response. This delay avoids conflicts on the serial line when the RS232 interface that is used has not been pre-set for automatic Tx/Rx switching. The parameter only concerns the use of the standard RS232 serial line.

Example: if the delay in Tx/Rx switching on the master is a maximum of 20ms, the **Ser answer delay** parameter must be set to at least 20ms: 22ms

| Menu | PAR | Description | UM | Type | FB BIT | Def | Min | Max | Acc | Mod |
|---|---|---|---|---|---|---|---|---|---|---|
| **21.1.6** | **3808** | **Serial swap data** | | BIT | | 0 | 0 | 1 | ERW | FVS |

This parameter enables the exchange of the reading of the High and Low parts of the words for FLOAT type parameters when using the Modbus protocol.

## 21.2 - COMMUNICATION/FIELDBUS CONFIG

| Menu | PAR | Description | UM | Type | FB BIT | Def | Min | Max | Acc | Mod |
|---|---|---|---|---|---|---|---|---|---|---|
| **21.2.1** | **4000** | **Fieldbus type** | | ENUM | | Spento | 0 | 2 | ERW | FVS |

Setting of the type of fieldbus to be used.
**0** Off
**1** CANopen
**10** DS417

If set to **0** no fieldbus is selected.

If set to **1** the CANopen fieldbus profile is selected.

If set to **10** the DS417 fieldbus is selected.

The CiA 417 is an MDPLC application. See the CiA 417 manual for configuration).

| Menu | PAR | Description | UM | Type | FB BIT | Def | Min | Max | Acc | Mod |
|---|---|---|---|---|---|---|---|---|---|---|
| **21.2.2** | **4004** | **Fieldbus baudrate** | | ENUM | | 500k | 0 | 4 | ERW | FVS |

Setting of the communication network speed (Baud Rate)
**0** Auto
**1** 125k
**2** 250k
**3** 500k
**4** 1M

| Menu | PAR | Description | UM | Type | FB BIT | Def | Min | Max | Acc | Mod |
|---|---|---|---|---|---|---|---|---|---|---|
| **21.2.3** | **4006** | **Fieldbus address** | | INT16 | | 2 | 0 | 255 | ERW | FVS |

Setting of the node address of the drive when connected to the network.

| Menu | PAR | Description | UM | Type | FB BIT | Def | Min | Max | Acc | Mod |
|---|---|---|---|---|---|---|---|---|---|---|
| **21.2.4** | **4010** | **Fieldbus M->S enable** | | ENUM | | Enable | 0 | 1 | ERWZ | FVS |

Setting of fieldbus data updating.
**0** Disable
**1** Enable
If set to **0**, the possibility of sending commands and references from the drive PLC via the fieldbus is disabled.
If set to **1** the possibility of sending commands and references from the drive PLC via the fieldbus is enabled.

| Menu | PAR | Description | UM | Type | FB BIT | Def | Min | Max | Acc | Mod |
|---|---|---|---|---|---|---|---|---|---|---|
| **21.2.5** | **4012** | **Fieldbus alarm mode** | | INT32 | | 0 | 0 | 1 | ERWZ | FVS |

Setting of the Opt Bus Fault alarm generation mode.
**0** Disable
**1** Enable

If set to 0 the alarm is only generated if the communication with the fieldbus is lost with the drive enabled..

If set to 1 the alarm is generated when the communication with the fieldbus is lost even if the drive is disabled. .

| Menu | PAR | Description | UM | Type | FB BIT | Def | Min | Max | Acc | Mod |
|---|---|---|---|---|---|---|---|---|---|---|
| **21.2.6** | **4014** | **Fieldbus state** | | ENUM | | Stop | 0 | 2 | R | FVS |

The logic status of the fieldbus connection is displayed. The value depends on the type of bus that is used.
**0** Stop
**1** Pre operational
**2** Operational

## 21.3 - COMMUNICATION/FIELDBUS M2S

| Menu | PAR | Description | UM | Type | FB BIT | Def | Min | Max | Acc | Mod |
|---|---|---|---|---|---|---|---|---|---|---|
| **21.3.1** | **4020** | **Fieldbus M->S1 ipa** | | FBM2SIPA | | 0 | 0 | 20000 | ERW | FVS |
| **21.3.5** | **4030** | **Fieldbus M->S2 ipa** | | FBM2SIPA | | 0 | 0 | 20000 | ERW | FVS |
| **21.3.9** | **4040** | **Fieldbus M->S3 ipa** | | FBM2SIPA | | 0 | 0 | 20000 | ERW | FVS |
| **21.3.13** | **4050** | **Fieldbus M->S4 ipa** | | FBM2SIPA | | 0 | 0 | 20000 | ERW | FVS |
| **21.3.17** | **4060** | **Fieldbus M->S5 ipa** | | FBM2SIPA | | 0 | 0 | 20000 | ERW | FVS |
| **21.3.21** | **4070** | **Fieldbus M->S6 ipa** | | FBM2SIPA | | 0 | 0 | 20000 | ERW | FVS |
| **21.3.25** | **4080** | **Fieldbus M->S7 ipa** | | FBM2SIPA | | 0 | 0 | 20000 | ERW | FVS |
| **21.3.29** | **4090** | **Fieldbus M->S8 ipa** | | FBM2SIPA | | 0 | 0 | 20000 | ERW | FVS |
| **21.3.33** | **4100** | **Fieldbus M->S9 ipa** | | FBM2SIPA | | 0 | 0 | 20000 | ERW | FVS |
| **21.3.37** | **4110** | **Fieldbus M->S10 ipa** | | FBM2SIPA | | 0 | 0 | 20000 | ERW | FVS |
| **21.3.41** | **4120** | **Fieldbus M->S11 ipa** | | FBM2SIPA | | 0 | 0 | 20000 | ERW | FVS |
| **21.3.45** | **4130** | **Fieldbus M->S12 ipa** | | FBM2SIPA | | 0 | 0 | 20000 | ERW | FVS |
| **21.3.49** | **4140** | **Fieldbus M->S13 ipa** | | FBM2SIPA | | 0 | 0 | 20000 | ERW | FVS |
| **21.3.53** | **4150** | **Fieldbus M->S14 ipa** | | FBM2SIPA | | 0 | 0 | 20000 | ERW | FVS |
| **21.3.57** | **4160** | **Fieldbus M->S15 ipa** | | FBM2SIPA | | 0 | 0 | 20000 | ERW | FVS |
| **21.3.61** | **4170** | **Fieldbus M->S16 ipa** | | FBM2SIPA | | 0 | 0 | 20000 | ERW | FVS |

Setting of the parameter to associate with the bus channel. The default setting is 0, which means channel not active.

If the parameter to be connected is a **sorg** (source), the channel and parameter can also be associated by modifying the

**sorg** parameter in its menu.
When setting a parameter, the format is also automatically set in the sys parameter.

| Menu | PAR | Description | UM | Type | FB BIT | Def | Min | Max | Acc | Mod |
|---|---|---|---|---|---|---|---|---|---|---|
| **21.3.2** | **4022** | **Fieldbus M->S1 sys** | | ENUM | | Not assigned | 0 | 10 | ERW | FVS |
| **21.3.6** | **4032** | **Fieldbus M->S2 sys** | | ENUM | | Not assigned | 0 | 10 | ERW | FVS |
| **21.3.10** | **4042** | **Fieldbus M->S3 sys** | | ENUM | | Not assigned | 0 | 10 | ERW | FVS |
| **21.3.14** | **4052** | **Fieldbus M->S4 sys** | | ENUM | | Not assigned | 0 | 10 | ERW | FVS |
| **21.3.18** | **4062** | **Fieldbus M->S5 sys** | | ENUM | | Not assigned | 0 | 10 | ERW | FVS |
| **21.3.22** | **4072** | **Fieldbus M->S6 sys** | | ENUM | | Not assigned | 0 | 10 | ERW | FVS |
| **21.3.26** | **4082** | **Fieldbus M->S7 sys** | | ENUM | | Not assigned | 0 | 10 | ERW | FVS |
| **21.3.30** | **4092** | **Fieldbus M->S8 sys** | | ENUM | | Not assigned | 0 | 10 | ERW | FVS |
| **21.3.34** | **4102** | **Fieldbus M->S9 sys** | | ENUM | | Not assigned | 0 | 10 | ERW | FVS |
| **21.3.38** | **4112** | **Fieldbus M->S10 sys** | | ENUM | | Not assigned | 0 | 10 | ERW | FVS |
| **21.3.42** | **4122** | **Fieldbus M->S11 sys** | | ENUM | | Not assigned | 0 | 10 | ERW | FVS |
| **21.3.46** | **4132** | **Fieldbus M->S12 sys** | | ENUM | | Not assigned | 0 | 10 | ERW | FVS |
| **21.3.50** | **4142** | **Fieldbus M->S13 sys** | | ENUM | | Not assigned | 0 | 10 | ERW | FVS |
| **21.3.54** | **4152** | **Fieldbus M->S14 sys** | | ENUM | | Not assigned | 0 | 10 | ERW | FVS |
| **21.3.58** | **4162** | **Fieldbus M->S15 sys** | | ENUM | | Not assigned | 0 | 10 | ERW | FVS |
| **21.3.62** | **4172** | **Fieldbus M->S16 sys** | | ENUM | | Not assigned | 0 | 10 | ERW | FVS |

Setting of the format of the datum received on the channel. When the src parameter is programmed, the format is automatically programmed on the relative sys. If the src parameter is reset to null, the format does not change. The value of the format can be selected from the following list, according to the parameter selected as the source:

**0** Not assigned
**1** Count 16
**2** Count 32
**3** Fill 16
**4** Fill 32
**5** Mdplc 16
**6** Mdplc 32
**7** UM
**8** UM float
**9** Par 16
**10** Par 32

If set to **0** the channel is not assigned.
If set to **1** the datum is assigned a 16-bit count.
If set to **2** the datum is assigned a 32-bit count.
If set to **3** 16 bits on the channel are reserved for the datum, not used.
If set to **4** 32 bits on the channel are reserved for the datum, not used.
If set to **5** the datum is assigned a 16-bit count used by MDPLC.
If set to **6** the datum is assigned a 32-bit count used by MDPLC.
If set to **7** the datum is assigned engineering units on a 16-bit integer.
If set to **8** the datum is assigned engineering units on a 32-bit integer.
If set to **9**, the datum is assigned a 16-bit integer engineering unit format not in real time (5-10ms)
If set to **10** the datum is assigned a 32-bit integer engineering unit format or float format if the associated parameter is a float-type parameter not in real time (5-10ms)

***Note!*** If the sys parameter is **not assigned**, none of the subsequent fieldbus channels are read, even if programmed.

| Menu | PAR | Description | UM | Type | FB BIT | Def | Min | Max | Acc | Mod |
|---|---|---|---|---|---|---|---|---|---|---|
| **21.3.3** | **4024** | **Fieldbus M->S1 mon** | | INT32 | 32BIT | 0 | 0 | 0 | ER | FVS |
| **21.3.7** | **4034** | **Fieldbus M->S2 mon** | | INT32 | 32BIT | 0 | 0 | 0 | ER | FVS |
| **21.3.11** | **4044** | **Fieldbus M->S3 mon** | | INT32 | 32BIT | 0 | 0 | 0 | ER | FVS |
| **21.3.15** | **4054** | **Fieldbus M->S4 mon** | | INT32 | 32BIT | 0 | 0 | 0 | ER | FVS |
| **21.3.19** | **4064** | **Fieldbus M->S5 mon** | | INT32 | 32BIT | 0 | 0 | 0 | ER | FVS |
| **21.3.23** | **4074** | **Fieldbus M->S6 mon** | | INT32 | 32BIT | 0 | 0 | 0 | ER | FVS |
| **21.3.27** | **4084** | **Fieldbus M->S7 mon** | | INT32 | 32BIT | 0 | 0 | 0 | ER | FVS |
| **21.3.31** | **4094** | **Fieldbus M->S8 mon** | | INT32 | 32BIT | 0 | 0 | 0 | ER | FVS |

| | | | | | | | | | |
|---|---|---|---|---|---|---|---|---|---|
| **21.3.35** | **4104** | **Fieldbus M->S9 mon** | INT32 | 32BIT | 0 | 0 | 0 | ER | FVS |
| **21.3.39** | **4114** | **Fieldbus M->S10 mon** | INT32 | 32BIT | 0 | 0 | 0 | ER | FVS |
| **21.3.43** | **4124** | **Fieldbus M->S11mon** | INT32 | 32BIT | 0 | 0 | 0 | ER | FVS |
| **21.3.47** | **4134** | **Fieldbus M->S12 mon** | INT32 | 32BIT | 0 | 0 | 0 | ER | FVS |
| **21.3.51** | **4144** | **Fieldbus M->S13 mon** | INT32 | 32BIT | 0 | 0 | 0 | ER | FVS |
| **21.3.55** | **4154** | **Fieldbus M->S14 mon** | INT32 | 32BIT | 0 | 0 | 0 | ER | FVS |
| **21.3.59** | **4164** | **Fieldbus M->S15 mon** | INT32 | 32BIT | 0 | 0 | 0 | ER | FVS |
| **21.3.63** | **4174** | **Fieldbus M->S16 mon** | INT32 | 32BIT | 0 | 0 | 0 | ER | FVS |

The value received from the bus is displayed. This parameter must be associated with the src parameter to enable the **M->S** channel.

The user may modify the **M->S** and by **S->M** sys parameters. The consistency of the sys with the parameter assigned to the channel is checked.

**A Fieldbus M->S X Mon parameter can only be assigned to a single "src". If assigned to more than one src, an error signal is generated during fieldbus initialization.**

| Menu | PAR | Description | UM | Type | FB BIT | Def | Min | Max | Acc | Mod |
|---|---|---|---|---|---|---|---|---|---|---|
| **21.3.4** | **4026** | **Fieldbus M->S1 div** | | FLOAT | | 1.0 | 1.0 | 1000.0 | ERW | FVS |
| **21.3.8** | **4036** | **Fieldbus M->S2 div** | | FLOAT | | 1.0 | 1.0 | 1000.0 | ERW | FVS |
| **21.3.12** | **4046** | **Fieldbus M->S3 div** | | FLOAT | | 1.0 | 1.0 | 1000.0 | ERW | FVS |
| **21.3.16** | **4056** | **Fieldbus M->S4 div** | | FLOAT | | 1.0 | 1.0 | 1000.0 | ERW | FVS |
| **21.3.20** | **4066** | **Fieldbus M->S5 div** | | FLOAT | | 1.0 | 1.0 | 1000.0 | ERW | FVS |
| **21.3.24** | **4076** | **Fieldbus M->S6 div** | | FLOAT | | 1.0 | 1.0 | 1000.0 | ERW | FVS |
| **21.3.28** | **4086** | **Fieldbus M->S7 div** | | FLOAT | | 1.0 | 1.0 | 1000.0 | ERW | FVS |
| **21.3.32** | **4096** | **Fieldbus M->S8 div** | | FLOAT | | 1.0 | 1.0 | 1000.0 | ERW | FVS |
| **21.3.36** | **4106** | **Fieldbus M->S9 div** | | FLOAT | | 1.0 | 1.0 | 1000.0 | ERW | FVS |
| **21.3.40** | **4116** | **Fieldbus M->S10 div** | | FLOAT | | 1.0 | 1.0 | 1000.0 | ERW | FVS |
| **21.3.44** | **4126** | **Fieldbus M->S11 div** | | FLOAT | | 1.0 | 1.0 | 1000.0 | ERW | FVS |
| **21.3.48** | **4136** | **Fieldbus M->S12 div** | | FLOAT | | 1.0 | 1.0 | 1000.0 | ERW | FVS |
| **21.3.52** | **4146** | **Fieldbus M->S13 div** | | FLOAT | | 1.0 | 1.0 | 1000.0 | ERW | FVS |
| **21.3.56** | **4156** | **Fieldbus M->S14 div** | | FLOAT | | 1.0 | 1.0 | 1000.0 | ERW | FVS |
| **21.3.60** | **4166** | **Fieldbus M->S15 div** | | FLOAT | | 1.0 | 1.0 | 1000.0 | ERW | FVS |
| **21.3.64** | **4176** | **Fieldbus M->S16 div** | | FLOAT | | 1.0 | 1.0 | 1000.0 | ERW | FVS |

The **Div M->Sx fieldbus** parameters can be used to increase the resolution of the datum sent on the bus to the drive in the corresponding channel in EU and EU_float exchange mode. The parameter value is used by the drive as the divider of the incoming datum, so that a number with decimal digits can be transferred.

***Nota!*** You must check the size in bits of the datum that is sent to make sure that the maximum value in bits fits in a 16-bit integer. For example, if specifying the divider as "Fieldbus M->Sn div" = 1000, the maximum value that can be used for the exchanged datum is 32.768 (32768/1000).

Example : **Div M->Sx fieldbus** = 10, **M->S1 fieldbus par** = **Ramp ref src 1**, **Sys M->S1 fieldbus** = **EU**. If the PLC sends the decimal value 1000 on the first word the value of **ramp ref 1** on the drive is 1000/10 = 100.

## 21.4 - COMMUNICATION/FIELDBUS S2M

| Menu | PAR | Description | UM | Type | FB BIT | Def | Min | Max | Acc | Mod |
|---|---|---|---|---|---|---|---|---|---|---|
| **21.4.1** | **4180** | **Fieldbus S->M1 ipa** | | FBS2MIPA | | 0 | 0 | 20000 | ERW | FVS |
| **21.4.5** | **4190** | **Fieldbus S->M2 ipa** | | FBS2MIPA | | 0 | 0 | 20000 | ERW | FVS |
| **21.4.9** | **4200** | **Fieldbus S->M3 ipa** | | FBS2MIPA | | 0 | 0 | 20000 | ERW | FVS |
| **21.4.13** | **4210** | **Fieldbus S->M4 ipa** | | FBS2MIPA | | 0 | 0 | 20000 | ERW | FVS |
| **21.4.17** | **4220** | **Fieldbus S->M5 ipa** | | FBS2MIPA | | 0 | 0 | 20000 | ERW | FVS |
| **21.4.21** | **4230** | **Fieldbus S->M6 ipa** | | FBS2MIPA | | 0 | 0 | 20000 | ERW | FVS |
| **21.4.25** | **4240** | **Fieldbus S->M7 ipa** | | FBS2MIPA | | 0 | 0 | 20000 | ERW | FVS |
| **21.4.29** | **4250** | **Fieldbus S->M8 ipa** | | FBS2MIPA | | 0 | 0 | 20000 | ERW | FVS |
| **21.4.33** | **4260** | **Fieldbus S->M9 ipa** | | FBS2MIPA | | 0 | 0 | 20000 | ERW | FVS |
| **21.4.37** | **4270** | **Fieldbus S->M10 ipa** | | FBS2MIPA | | 0 | 0 | 20000 | ERW | FVS |
| **21.4.41** | **4280** | **Fieldbus S->M11 ipa** | | FBS2MIPA | | 0 | 0 | 20000 | ERW | FVS |

| | | | | | | | | |
|---|---|---|---|---|---|---|---|---|
| **21.4.45** | **4290** | **Fieldbus S->M12 ipa** | FBS2MIPA | 0 | 0 | 20000 | ERW | FVS |
| **21.4.49** | **4300** | **Fieldbus S->M13 ipa** | FBS2MIPA | 0 | 0 | 20000 | ERW | FVS |
| **21.4.53** | **4310** | **Fieldbus S->M14 ipa** | FBS2MIPA | 0 | 0 | 20000 | ERW | FVS |
| **21.4.57** | **4320** | **Fieldbus S->M15 ipa** | FBS2MIPA | 0 | 0 | 20000 | ERW | FVS |
| **21.4.61** | **4330** | **Fieldbus S->M16 ipa** | FBS2MIPA | 0 | 0 | 20000 | ERW | FVS |

Setting of the parameter to associate with the bus channel. The default setting is 0, which means channel not active.
When setting a parameter, the format is also automatically set in the sys parameter

| Menu | PAR | Description | UM | Type | FB BIT | Def | Min | Max | Acc | Mod |
|---|---|---|---|---|---|---|---|---|---|---|
| **21.4.2** | **4182** | **Fieldbus S->M1 sys** | | ENUM | | Not assigned | 0 | 10 | ERW | FVS |
| **21.4.6** | **4192** | **Fieldbus S->M2 sys** | | ENUM | | Not assigned | 0 | 10 | ERW | FVS |
| **21.4.10** | **4202** | **Fieldbus S->M3 sys** | | ENUM | | Not assigned | 0 | 10 | ERW | FVS |
| **21.4.14** | **4212** | **Fieldbus S->M4 sys** | | ENUM | | Not assigned | 0 | 10 | ERW | FVS |
| **21.4.18** | **4222** | **Fieldbus S->M5 sys** | | ENUM | | Not assigned | 0 | 10 | ERW | FVS |
| **21.4.22** | **4232** | **Fieldbus S->M6 sys** | | ENUM | | Not assigned | 0 | 10 | ERW | FVS |
| **21.4.26** | **4242** | **Fieldbus S->M7 sys** | | ENUM | | Not assigned | 0 | 10 | ERW | FVS |
| **21.4.30** | **4252** | **Fieldbus S->M8 sys** | | ENUM | | Not assigned | 0 | 10 | ERW | FVS |
| **21.4.34** | **4262** | **Fieldbus S->M9 sys** | | ENUM | | Not assigned | 0 | 10 | ERW | FVS |
| **21.4.38** | **4272** | **Fieldbus S->M10 sys** | | ENUM | | Not assigned | 0 | 10 | ERW | FVS |
| **21.4.42** | **4282** | **Fieldbus S->M11 sys** | | ENUM | | Not assigned | 0 | 10 | ERW | FVS |
| **21.4.46** | **4292** | **Fieldbus S->M12 sys** | | ENUM | | Not assigned | 0 | 10 | ERW | FVS |
| **21.4.50** | **4302** | **Fieldbus S->M13 sys** | | ENUM | | Not assigned | 0 | 10 | ERW | FVS |
| **21.4.54** | **4312** | **Fieldbus S->M14 sys** | | ENUM | | Not assigned | 0 | 10 | ERW | FVS |
| **21.4.58** | **4322** | **Fieldbus S->M15 sys** | | ENUM | | Not assigned | 0 | 10 | ERW | FVS |
| **21.4.62** | **4332** | **Fieldbus S->M16 sys** | | ENUM | | Not assigned | 0 | 10 | ERW | FVS |

Setting of the format of the datum sent to the channel. When the src parameter is programmed, the format is programmed as **EU** or **MDPLC 16**. If the src parameter is reset to null, the datum format does not change. The value of the format can be selected from the following list:

**0** Not assigned
**1** Count 16
**2** Count 32
**3** Fill 16
**4** Fill 32
**5** Mdplc 16
**6** Mdplc 32
**7** EU
**8** EU float
**9** Par 16
**10** Par 32

If set to **0** the channel is not assigned.
If set to **1** the datum is assigned a 16-bit count.
If set to **2** the datum is assigned a 32-bit count.
If set to **3** 16 bits on the channel are reserved for the datum, not used.
If set to **4** 32 bits on the channel are reserved for the datum, not used.
If set to **5** the datum is assigned a 16-bit count used by MDPLC.
If set to **6** the datum is assigned a 32-bit count used by MDPLC.
If set to **7** the datum is assigned engineering units on a 16-bit integer.
If set to **8** the datum is assigned engineering units on a 32-bit integer.
If set to **9**, the datum is assigned a 16-bit integer engineering unit format not in real time (5-10ms)
If set to **10** the datum is assigned a 32-bit integer engineering unit format or float format if the associated parameter is a float-type parameter not in real time (5-10ms)

***Note!*** If the sys parameter is **not assigned**, none of the subsequent channels are transferred to the fieldbus, even if programmed.

| Menu | PAR | Description | UM | Type | FB BIT | Def | Min | Max | Acc | Mod |
|---|---|---|---|---|---|---|---|---|---|---|
| **21.4.3** | **4184** | **Dig Fieldbus S->M1** | | INT32 | 32BIT | 0 | 0 | 0 | ERW | FVS |
| **21.4.7** | **4194** | **Dig Fieldbus S->M2** | | INT32 | 32BIT | 0 | 0 | 0 | ERW | FVS |
| **21.4.11** | **4204** | **Dig Fieldbus S->M3** | | INT32 | 32BIT | 0 | 0 | 0 | ERW | FVS |

| | | | | | | | | | |
|---|---|---|---|---|---|---|---|---|---|
| **21.4.15** | **4214** | **Dig Fieldbus S->M4** | INT32 | 32BIT | 0 | 0 | 0 | ERW | FVS |
| **21.4.19** | **4224** | **Dig Fieldbus S->M5** | INT32 | 32BIT | 0 | 0 | 0 | ERW | FVS |
| **21.4.23** | **4234** | **Dig Fieldbus S->M6** | INT32 | 32BIT | 0 | 0 | 0 | ERW | FVS |
| **21.4.27** | **4244** | **Dig Fieldbus S->M7** | INT32 | 32BIT | 0 | 0 | 0 | ERW | FVS |
| **21.4.31** | **4254** | **Dig Fieldbus S->M8** | INT32 | 32BIT | 0 | 0 | 0 | ERW | FVS |
| **21.4.35** | **4264** | **Dig Fieldbus S->M9** | INT32 | 32BIT | 0 | 0 | 0 | ERW | FVS |
| **21.4.39** | **4274** | **Dig Fieldbus S->M10** | INT32 | 32BIT | 0 | 0 | 0 | ERW | FVS |
| **21.4.43** | **4284** | **Dig Fieldbus S->M11** | INT32 | 32BIT | 0 | 0 | 0 | ERW | FVS |
| **21.4.47** | **4294** | **Dig Fieldbus S->M12** | INT32 | 32BIT | 0 | 0 | 0 | ERW | FVS |
| **21.4.51** | **4304** | **Dig Fieldbus S->M13** | INT32 | 32BIT | 0 | 0 | 0 | ERW | FVS |
| **21.4.55** | **4314** | **Dig Fieldbus S->M14** | INT32 | 32BIT | 0 | 0 | 0 | ERW | FVS |
| **21.4.59** | **4324** | **Dig Fieldbus S->M15** | INT32 | 32BIT | 0 | 0 | 0 | ERW | FVS |
| **21.4.63** | **4334** | **Dig Fieldbus S->M16** | INT32 | 32BIT | 0 | 0 | 0 | ERW | FVS |

If associated with the relative src, the value of this parameter is sent to the bus.

The user may modify the M->S and by S->M sys parameters. The consistency of the sys with the parameter assigned to the channel is checked.

| Menu | PAR | Description | UM | Type | FB BIT | Def | Min | Max | Acc | Mod |
|---|---|---|---|---|---|---|---|---|---|---|
| **21.4.4** | **4186** | **Fieldbus S->M1 mul** | | FLOAT | | 1.0 | 1.0 | 1000.0 | ERW | FVS |
| **21.4.8** | **4196** | **Fieldbus S->M2 mul** | | FLOAT | | 1.0 | 1.0 | 1000.0 | ERW | FVS |
| **21.4.12** | **4206** | **Fieldbus S->M3 mul** | | FLOAT | | 1.0 | 1.0 | 1000.0 | ERW | FVS |
| **21.4.16** | **4216** | **Fieldbus S->M4 mul** | | FLOAT | | 1.0 | 1.0 | 1000.0 | ERW | FVS |
| **21.4.20** | **4226** | **Fieldbus S->M5 mul** | | FLOAT | | 1.0 | 1.0 | 1000.0 | ERW | FVS |
| **21.4.24** | **4236** | **Fieldbus S->M6 mul** | | FLOAT | | 1.0 | 1.0 | 1000.0 | ERW | FVS |
| **21.4.28** | **4246** | **Fieldbus S->M7 mul** | | FLOAT | | 1.0 | 1.0 | 1000.0 | ERW | FVS |
| **21.4.32** | **4256** | **Fieldbus S->M8 mul** | | FLOAT | | 1.0 | 1.0 | 1000.0 | ERW | FVS |
| **21.4.36** | **4266** | **Fieldbus S->M9 mul** | | FLOAT | | 1.0 | 1.0 | 1000.0 | ERW | FVS |
| **21.4.40** | **4276** | **Fieldbus S->M10 mul** | | FLOAT | | 1.0 | 1.0 | 1000.0 | ERW | FVS |
| **21.4.44** | **4286** | **Fieldbus S->M11 mul** | | FLOAT | | 1.0 | 1.0 | 1000.0 | ERW | FVS |
| **21.4.48** | **4296** | **Fieldbus S->M12 mul** | | FLOAT | | 1.0 | 1.0 | 1000.0 | ERW | FVS |
| **21.4.52** | **4306** | **Fieldbus S->M13 mul** | | FLOAT | | 1.0 | 1.0 | 1000.0 | ERW | FVS |
| **21.4.56** | **4316** | **Fieldbus S->M14 mul** | | FLOAT | | 1.0 | 1.0 | 1000.0 | ERW | FVS |
| **21.4.60** | **4326** | **Fieldbus S->M15 mul** | | FLOAT | | 1.0 | 1.0 | 1000.0 | ERW | FVS |
| **21.4.64** | **4336** | **Fieldbus S->M16 mul** | | FLOAT | | 1.0 | 1.0 | 1000.0 | ERW | FVS |

The "**Fieldbus S->Mx mul**" parameters are multipliers that the drive applies to the datum before sending it to the bus. It is therefore possible to increase the resolution of some values read in EU and EU_float mode, also using decimal digits.

**Note!** The drive does not check that the multiplied parameter expressed in bits fits in a 16-bit integer. You must make sure that the multiplier is compatible with the maximum value of the exchanged parameter and that it does not exceed the maximum size of 32768.

Example: **Fieldbus S->Mx mul** = 10, **S->M1 fieldbus par = Motor speed, Sys S->M1 fieldbus =** EU.

If the motor is running at 100 rpm, the PLC reads the value 100 * 10 = 1000 on the first word that is exchanged.

## 21.5 - COMMUNICATION/WORD COMP

| Menu | PAR | Description | UM | Type | FB BIT | Def | Min | Max | Acc | Mod |
|---|---|---|---|---|---|---|---|---|---|---|
| **21.5.1** | **4400** | **Word bit0 src** | | LINK | 16BIT | 6000 | 0 | 16384 | ERW | FVS |
| **21.5.2** | **4402** | **Word bit1 src** | | LINK | 16BIT | 6000 | 0 | 16384 | ERW | FVS |
| **21.5.3** | **4404** | **Word bit2 src** | | LINK | 16BIT | 6000 | 0 | 16384 | ERW | FVS |
| **21.5.4** | **4406** | **Word bit3 src** | | LINK | 16BIT | 6000 | 0 | 16384 | ERW | FVS |
| **21.5.5** | **4408** | **Word bit4 src** | | LINK | 16BIT | 6000 | 0 | 16384 | ERW | FVS |
| **21.5.6** | **4410** | **Word bit5 src** | | LINK | 16BIT | 6000 | 0 | 16384 | ERW | FVS |
| **21.5.7** | **4412** | **Word bit6 src** | | LINK | 16BIT | 6000 | 0 | 16384 | ERW | FVS |
| **21.5.8** | **4414** | **Word bit7 src** | | LINK | 16BIT | 6000 | 0 | 16384 | ERW | FVS |
| **21.5.9** | **4416** | **Word bit8 src** | | LINK | 16BIT | 6000 | 0 | 16384 | ERW | FVS |

| | | | | | | | | | |
|---|---|---|---|---|---|---|---|---|---|
| **21.5.10** | **4418** | **Word bit9 src** | LINK | 16BIT | 6000 | 0 | 16384 | ERW | FVS |
| **21.5.11** | **4420** | **Word bit10 src** | LINK | 16BIT | 6000 | 0 | 16384 | ERW | FVS |
| **21.5.12** | **4422** | **Word bit11 src** | LINK | 16BIT | 6000 | 0 | 16384 | ERW | FVS |
| **21.5.13** | **4424** | **Word bit12 src** | LINK | 16BIT | 6000 | 0 | 16384 | ERW | FVS |
| **21.5.14** | **4426** | **Word bit13 src** | LINK | 16BIT | 6000 | 0 | 16384 | ERW | FVS |
| **21.5.15** | **4428** | **Word bit14 src** | LINK | 16BIT | 6000 | 0 | 16384 | ERW | FVS |
| **21.5.16** | **4430** | **Word bit15 src** | LINK | 16BIT | 6000 | 0 | 16384 | ERW | FVS |

Selection of the origin (source) of the signal to be used for coding in **Word comp**. This function allows the user to compose a single word composed of 16 signals, each of which can be selected from among those listed in the **"L_DIGSEL1"** selection list".

The values of the sectioned sizes are converted into a single word.

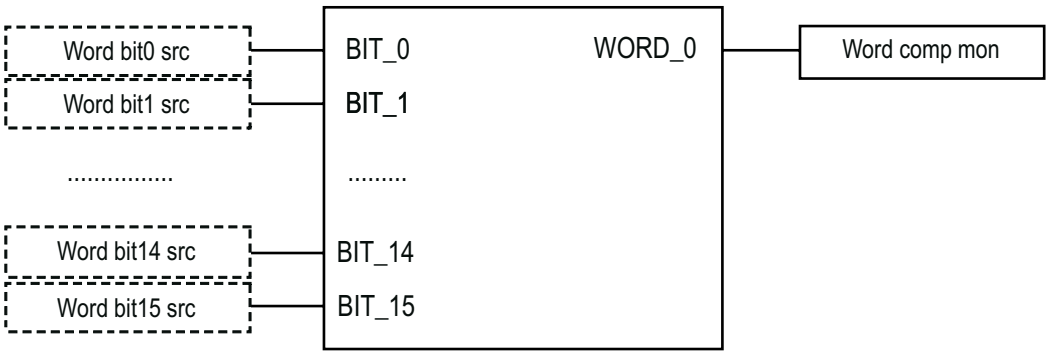


| Menu | PAR | Description | UM | Type | FB BIT | Def | Min | Max | Acc | Mod |
|---|---|---|---|---|---|---|---|---|---|---|
| **21.5.17** | **4432** | **Word comp mon** | | UINT32 | 16BIT | 0 | 0 | 0 | ER | FVS |

The hexadecimal value of the **Word comp** output is displayed.

## 21.6 - COMMUNICATION/WORD COMP

| Menu | PAR | Description | UM | Type | FB BIT | Def | Min | Max | Acc | Mod |
|---|---|---|---|---|---|---|---|---|---|---|
| **21.6.1** | **4450** | **Dig word decomp** | | UINT32 | 16BIT | 0 | 0 | 0 | ERW | FVS |

Setting of the digital input decoded by the "**Word decomp**" block.

| Menu | PAR | Description | UM | Type | FB BIT | Def | Min | Max | Acc | Mod |
|---|---|---|---|---|---|---|---|---|---|---|
| **21.6.2** | **4452** | **Word decomp src** | | LINK | 16BIT | 4450 | 0 | 16384 | ERW | FVS |

Selection of the origin (source) of the word to be decoded by the "**Word decomp**" block. Each bit that is part of the word to be decoded is associated with the output channel of the "**Word decomp**" block. The variables that can be used for this function can be selected from among those listed in the "**L_WDECOMP**" selection list"

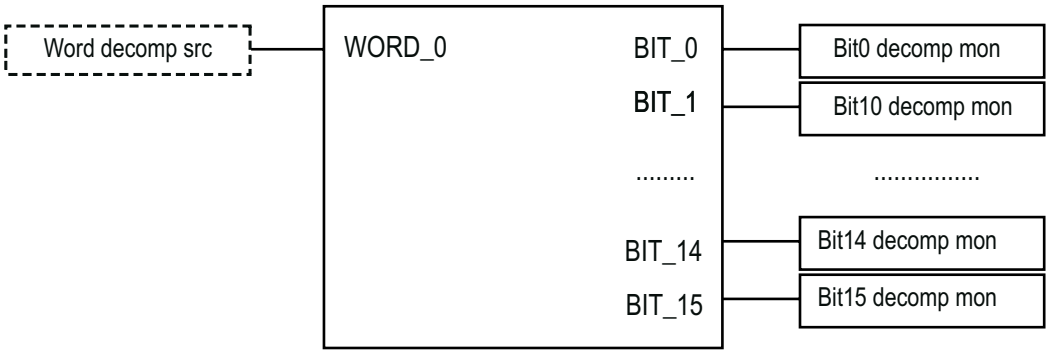


| Menu | PAR | Description | UM | Type | FB BIT | Def | Min | Max | Acc | Mod |
|---|---|---|---|---|---|---|---|---|---|---|
| **21.6.3** | **4454** | **Bit0 decomp mon** | | BIT | 16BIT | 0 | 0 | 1 | ER | FVS |
| **21.6.4** | **4456** | **Bit1 decomp mon** | | BIT | 16BIT | 0 | 0 | 1 | ER | FVS |
| **21.6.5** | **4458** | **Bit2 decomp mon** | | BIT | 16BIT | 0 | 0 | 1 | ER | FVS |
| **21.6.6** | **4460** | **Bit3 decomp mon** | | BIT | 16BIT | 0 | 0 | 1 | ER | FVS |
| **21.6.7** | **4462** | **Bit4 decomp mon** | | BIT | 16BIT | 0 | 0 | 1 | ER | FVS |
| **21.6.8** | **4464** | **Bit5 decomp mon** | | BIT | 16BIT | 0 | 0 | 1 | ER | FVS |

| | | | | | | | | | |
|---|---|---|---|---|---|---|---|---|---|
| **21.6.9** | **4466** | **Bit6 decomp mon** | BIT | 16BIT | 0 | 0 | 1 | ER | FVS |
| **21.6.10** | **4468** | **Bit7 decomp mon** | BIT | 16BIT | 0 | 0 | 1 | ER | FVS |
| **21.6.11** | **4470** | **Bit8 decomp mon** | BIT | 16BIT | 0 | 0 | 1 | ER | FVS |
| **21.6.12** | **4472** | **Bit9 decomp mon** | BIT | 16BIT | 0 | 0 | 1 | ER | FVS |
| **21.6.13** | **4474** | **Bit10 decomp mon** | BIT | 16BIT | 0 | 0 | 1 | ER | FVS |
| **21.6.14** | **4476** | **Bit11 decomp mon** | BIT | 16BIT | 0 | 0 | 1 | ER | FVS |
| **21.6.15** | **4478** | **Bit12 decomp mon** | BIT | 16BIT | 0 | 0 | 1 | ER | FVS |
| **21.6.16** | **4480** | **Bit13 decomp mon** | BIT | 16BIT | 0 | 0 | 1 | ER | FVS |
| **21.6.17** | **4482** | **Bit14 decomp mon** | BIT | 16BIT | 0 | 0 | 1 | ER | FVS |
| **21.6.18** | **4484** | **Bit15 decomp mon** | BIT | 16BIT | 0 | 0 | 1 | ER | FVS |

The single bits that make up the selected word are displayed.

# 22 - ALARM CONFIG

In the ALARM CONFIG menu the type of effect any alarm signals have on the drive is determined:

- The alarm status is saved
- How must the drive react to the alarm signal?
- Auto restart
- Alarm reset

For some alarms, behaviour can be configured separately for each signal, while for the others the **Disable drive** is executed. Individual signals can also be sent to a programmable digital output.

**Activity**

**Ignore** — The alarm is not included in the list of alarms, it is not included in the alarm log, it is not signalled on the digital outputs, no drive commands are modified.

**Warning** — The alarm is included in the list of alarms, it is included in the alarm log, it is signalled on the digital outputs, the First alarm information is updated, the Alarm enabled information is updated, no drive commands are modified.

**Disable Drive** — The alarm is included in the list of alarms, it is included in the alarm log, it is signalled on the digital outputs, the First alarm information is updated, the Alarm enabled information is updated, a command is sent to stop and disable the motor, which stops due to inertia.

**Stop** — The alarm is included in the list of alarms, it is included in the alarm log, it is signalled on the digital outputs, the First alarm information is updated, the Alarm enabled information is updated, a Stop command is sent. When the zero speed is reached the drive is disabled. If **Ramp** control mode is enabled, the drive moves to the zero speed with the set ramp time; when the **Speed delay 0** signal is activated the drive is disabled. If **Speed** control mode is enabled, the drive moves to the zero speed with the maximum current possible; when the **Speed delay 0** signal is activated the drive is disabled. If **Torque** control mode is enabled, the drive moves to the zero speed with the time set by the load; when the **Speed delay 0** signal is activated the drive is disabled.

**Fast stop** — The alarm is included in the list of alarms, it is included in the alarm log, it is signalled on the digital outputs, the First alarm information is updated, the Alarm enabled information is updated, a Fast Stop command is sent. When the zero speed is reached the drive is disabled. If **Ramp** control mode is enabled, the drive moves to the zero speed with the set fast stop ramp time (deceleration time 3); when the **Speed delay 0** signal is activated the drive is disabled. If **Speed** control mode is enabled, the drive moves to the zero speed with the maximum current possible; when the **Speed delay 0** signal is activated the drive is disabled. If **Torque** control mode is enabled, the drive moves to the zero speed with the set load time; when the **Speed delay 0** signal is activated the drive is disabled.

An alarms with Activity = Ignore or Warning can be enabled at the same time.

If an alarm with Activity = Stop or Fast Stop is enabled and another alarm with an Activity other than Ignore or Warning is enabled, the drive stops and is disabled.

Not all alarms allow the controlled stopping of the drive. The following table shows the possibility of setting the Activities for the individual alarm signals.

| Alarm | Ignore | Warning | Disable drive | Stop | Fast stop |
|---|---|---|---|---|---|
| ExtFlt | ✓ | ✓ | ✓ | ✓ | ✓ |
| Motor OT | ✓ | ✓ | ✓ | ✓ | ✓ |
| Overspeed | ✓ | ✓ | ✓ | ✓ | ✓ |
| SpdRefLoss | ✓ | ✓ | ✓ | ✓ | ✓ |
| SpdFbkLoss | ✓ | ✓ | ✓ | ✓ | ✓ |
| Drive ovld | ✓ | ✓ | ✓ | ✓ | ✓ |
| Motor ovld | ✓ | ✓ | ✓ | ✓ | ✓ |

| Alarm | Ignore | Warning | Disable drive | Stop | Fast stop |
|---|---|---|---|---|---|
| Bres ovld | ✓ | ✓ | ✓ | ✓ | ✓ |
| InAir | ✓ | ✓ | ✓ | ✓ | ✓ |
| PhLoss | ✓ | ✓ | ✓ | ✓ | ✓ |
| Opt Bus | ✓ | ✓ | ✓ | ✓ | ✓ |
| Mot PhLoss | ✓ | ✓ | ✓ | ✓ | ✓ |

| Menu | PAR | Description | UM | Type | FB BIT | Def | Min | Max | Acc | Mod |
|---|---|---|---|---|---|---|---|---|---|---|
| **22.1** | **4500** | **Fault reset src** | | LINK | 16BIT | 6000 | 0 | 16384 | RW | FVS |

Selection of the origin (source) of the signal to be used for the command to reset the drive after an alarm. The terminal that can be used for this function can be selected from among those listed in the **"L_DIGSEL2"** selection list.

| Menu | PAR | Description | UM | Type | FB BIT | Def | Min | Max | Acc | Mod |
|---|---|---|---|---|---|---|---|---|---|---|
| **22.2** | **4502** | **ExtFlt src** | | LINK | 16BIT | 6000 | 0 | 16384 | RW | FVS |

Selection of the origin (source) of the signal to be used as the input for the drive external fault alarm **ExtFlt**. The terminal that can be used for this function can be selected from among those listed in the "**L_DIGSEL2**" selection list.

| Menu | PAR | Description | UM | Type | FB BIT | Def | Min | Max | Acc | Mod |
|---|---|---|---|---|---|---|---|---|---|---|
| **22.3** | **4504** | **ExtFlt activity** | | ENUM | | Disable | 0 | 4 | RW | FVS |

Setting of the behaviour of the drive in the event of an external fault alarm **ExtFlt**. This alarm indicates the intervention of a drive external protection.

**0** Ignore
**1** Warning
**2** Disable
**3** Stop
**4** Fast stop

| Menu | PAR | Description | UM | Type | FB BIT | Def | Min | Max | Acc | Mod |
|---|---|---|---|---|---|---|---|---|---|---|
| **22.4** | **4506** | **ExtFlt restart** | | ENUM | | Disable | 0 | 1 | RW | FVS |

Enabling of automatic restart after the external fault alarm **ExtFlt**

**0** Disable
**1** Enable

| Menu | PAR | Description | UM | Type | FB BIT | Def | Min | Max | Acc | Mod |
|---|---|---|---|---|---|---|---|---|---|---|
| **22.5** | **4508** | **ExtFlt restart time** | ms | UINT16 | | 1000 | 120 | 30000 | RW | FVS |

Setting of the time within which the **External Fault** alarm must be reset in order to perform automatic restart.

| Menu | PAR | Description | UM | Type | FB BIT | Def | Min | Max | Acc | Mod |
|---|---|---|---|---|---|---|---|---|---|---|
| **22.6** | **4510** | **ExtFlt holdoff** | ms | UINT16 | | 0 | 0 | 10000 | RW | FVS |

Setting of the delay between the signalling of the external fault alarm **ExtFlt** and enabling of the alarm. If an alarm condition occurs, the drive will wait for the set time before blocking is enabled. If the alarm is removed within the set time, the drive will not indicate any alarm condition.

| Menu | PAR | Description | UM | Type | FB BIT | Def | Min | Max | Acc | Mod |
|---|---|---|---|---|---|---|---|---|---|---|
| **22.7** | **4520** | **MotorOT src** | | LINK | 16BIT | 6000 | 0 | 16384 | RW | FVS |

Selection of the origin (source) of the signal to be used for the motor overtemperature alarm **MotorOT**. The terminal that can be used for this function can be selected from among those listed in the "**L_DIGSEL2**" selection list".

| Menu | PAR | Description | UM | Type | FB BIT | Def | Min | Max | Acc | Mod |
|---|---|---|---|---|---|---|---|---|---|---|
| **22.8** | **4522** | **MotorOT activity** | | ENUM | | Avvisa | 0 | 4 | RW | FVS |

Setting of the behaviour of the drive in case of a motor overtemperature alarm **MotorOT**. This alarm indicates that the motor temperature is too high.

**0** Ignore
**1** Warning
**2** Disable
**3** Stop

**4** Fast stop

| Menu | PAR | Description | UM | Type | FB BIT | Def | Min | Max | Acc | Mod |
|---|---|---|---|---|---|---|---|---|---|---|
| **22.9** | **4524** | **MotorOT restart** | | ENUM | | Disable | 0 | 1 | RW | FVS |

Enabling of automatic restart after the motor overtemperature alarm **MotorOT**.
**0** Disable
**1** Enable

| Menu | PAR | Description | UM | Type | FB BIT | Def | Min | Max | Acc | Mod |
|---|---|---|---|---|---|---|---|---|---|---|
| **22.10** | **4526** | **MotorOT restart time** | ms | UINT16 | | 1000 | 120 | 30000 | RW | FVS |

Setting of the time within which the **Motor Overtemperature** alarm must be reset in order to perform automatic restart.

| Menu | PAR | Description | UM | Type | FB BIT | Def | Min | Max | Acc | Mod |
|---|---|---|---|---|---|---|---|---|---|---|
| **22.11** | **4528** | **MotorOT holdoff** | ms | UINT16 | | 1000 | 0 | 30000 | RW | FVS |

Setting of the delay between the signalling of the motor overtemperature alarm **MotorOT** and enabling of the alarm. If an alarm condition occurs, the drive will wait for the set time before enabling the alarm. If the alarm is removed within the set time, the drive will not indicate any alarm condition.

| Menu | PAR | Description | UM | Type | FB BIT | Def | Min | Max | Acc | Mod |
|---|---|---|---|---|---|---|---|---|---|---|
| **22.12** | **4540** | **Overspeed threshold** | rpm | INT16 | INT32 | CALCI | 0 | CALCI | RW | FVS |

Setting of the threshold above which the overspeed alarm **Overspeed** is enabled.

| Menu | PAR | Description | UM | Type | FB BIT | Def | Min | Max | Acc | Mod |
|---|---|---|---|---|---|---|---|---|---|---|
| **22.13** | **4542** | **Overspeed activity** | | ENUM | | Disable | 0 | 4 | RW | FVS |

Setting of the behaviour of the drive in case of a motor overspeed alarm **Overspeed**. This alarm indicates that the motor speed has exceeded the threshold set in the **Speed ref top lim** and **Speed ref bottom lim** parameters in the COMMANDS menu.
**0** Ignore
**1** Warning
**2** Disable
**3** Stop
**4** Fast stop

| Menu | PAR | Description | UM | Type | FB BIT | Def | Min | Max | Acc | Mod |
|---|---|---|---|---|---|---|---|---|---|---|
| **22.14** | **4544** | **Overspeed holdoff** | ms | UINT16 | | 0 | 0 | 5000 | RW | FVS |

Setting of the delay between the signalling of the motor overspeed alarm **Overspeed** and enabling of the alarm. If an alarm condition occurs, the drive will wait for the set time before enabling the alarm. If the alarm is removed within the set time, the drive will not indicate any alarm condition.

| Menu | PAR | Description | UM | Type | FB BIT | Def | Min | Max | Acc | Mod |
|---|---|---|---|---|---|---|---|---|---|---|
| **22.15** | **4550** | **SpdRefLoss threshold** | rpm | INT16 | | 100 | 0 | CALCI | RW | FVS |

Setting of the threshold below which the speed reference loss alarm **SpdRefLoss** occurs .

| Menu | PAR | Description | UM | Type | FB BIT | Def | Min | Max | Acc | Mod |
|---|---|---|---|---|---|---|---|---|---|---|
| **22.16** | **4552** | **SpdRefLoss activity** | | ENUM | | Avvisa | 0 | 4 | RW | FVS |

Setting of the behaviour of the drive in case of a speed reference loss alarm **SpdRefLoss**. This alarm indicates that the difference between the speed regulator reference and the actual motor speed is more than 100 rpm.

This alarm must be disabled (= 0 Ignore) when parameter **2354** is set to a value other than zero.
**0** Ignore
**1** Warning
**2** Disable
**3** Stop
**4** Fast stop

| Menu | PAR | Description | UM | Type | FB BIT | Def | Min | Max | Acc | Mod |
|---|---|---|---|---|---|---|---|---|---|---|
| **22.17** | **4554** | **SpdRefLoss holdoff** | ms | UINT16 | | 1000 | 0 | 10000 | RW | FVS |

The delay between the **Speed ref loss** alarm condition signal and activation of the actual alarm. If an alarm condition occurs, the drive will wait for the set time before enabling the alarm. If the alarm is removed within the set time, the drive will not indicate any alarm condition.

| Menu | PAR | Description | UM | Type | FB BIT | Def | Min | Max | Acc | Mod |
|---|---|---|---|---|---|---|---|---|---|---|
| **22.18** | **4560** | **SpdFbkLoss activity** | | ENUM | | Disable | 0 | 4 | RW | FVS |

Drive behaviour in case of the Speed fbk loss alarm is displayed. This alarm indicates the loss of the encoder feedback signals. Each type of encoder generates the Speed fbk loss alarm differently (incremental signal error, absolute signal error, serial error).

**0** Ignore
**1** Warning
**2** Disable
**3** Stop
**4** Fast stop

For absolute Endat encoders and absolute Hiperface encoders, after the alarm is generated, the encoder reset command must be sent to the encoder: during this procedure the application verifies whether the encoder is signalling an encoder alarm condition to the drive and the alarm is acquired from this.

The causes of the **Speed fbk loss** alarm and the information acquired from the encoder are shown in the **SpdFbkLoss code** parameter 2172.

**Note!** See menu 15.13 for further information.

| Menu | PAR | Description | UM | Type | FB BIT | Def | Min | Max | Acc | Mod |
|---|---|---|---|---|---|---|---|---|---|---|
| **22.19** | **4562** | **SpdFbkLoss holdoff** | ms | UINT16 | | 200 | 0 | 10000 | RW | FVS |

Setting of the delay between the signalling of the speed feedback loss alarm condition **SpdFbkLoss** and the enabling of the alarm. If an alarm condition occurs, the drive will wait for the set time before enabling the alarm. If the alarm is removed within the set time, the drive will not indicate any alarm condition.

| Menu | PAR | Description | UM | Type | FB BIT | Def | Min | Max | Acc | Mod |
|---|---|---|---|---|---|---|---|---|---|---|
| **22.20** | **4564** | **SpdFbkLoss threshold** | rpm | INT16 | | 100 | 5 | CALCI | RW | FV_ |

If using incremental digital encoders in single-ended mode, this parameter sets the limit above which the drive executes the action set with parameter 4560 **SpdFbkLoss activity**.

| Menu | PAR | Description | UM | Type | FB BIT | Def | Min | Max | Acc | Mod |
|---|---|---|---|---|---|---|---|---|---|---|
| **22.21** | **4570** | **Drive ovld activity** | | ENUM | | Disable | 0 | 4 | ERW | FVS |

Setting of the behaviour of the drive in case of a drive overload alarm **Drive ovld**. This alarm indicates that the drive overload threshold has been reached.

**0** Ignore
**1** Warning
**2** Disable
**3** Stop
**4** Fast stop

| Menu | PAR | Description | UM | Type | FB BIT | Def | Min | Max | Acc | Mod |
|---|---|---|---|---|---|---|---|---|---|---|
| **22.22** | **4572** | **Motor ovld activity** | | ENUM | | Avvisa | 0 | 4 | ERW | FVS |

Setting of the behaviour of the drive in case of a motor overload alarm **Motor ovld**. This alarm indicates that the motor overload threshold has been reached.

**0** Ignore
**1** Warning
**2** Disable
**3** Stop
**4** Fast stop

| Menu | PAR | Description | UM | Type | FB BIT | Def | Min | Max | Acc | Mod |
|---|---|---|---|---|---|---|---|---|---|---|
| **22.23** | **4574** | **Bres ovld activity** | | ENUM | | Disable | 0 | 4 | ERW | FVS |

Setting of the behaviour of the drive in case of a braking resistor overload alarm **Bres ovld**. This alarm indicates that the braking resistor overload threshold has been reached.

**0** Ignore
**1** Warning
**2** Disable
**3** Stop
**4** Fast stop

| Menu | PAR | Description | UM | Type | FB BIT | Def | Min | Max | Acc | Mod |
|---|---|---|---|---|---|---|---|---|---|---|
| **22.24** | **4582** | **HTsens restart** | | ENUM | | Disable | 0 | 1 | ERW | FVS |

Enabling of automatic restart after the drive heatsink overtemperature alarm **HTsens**.
**0** Disable
**1** Enable

| Menu | PAR | Description | UM | Type | FB BIT | Def | Min | Max | Acc | Mod |
|---|---|---|---|---|---|---|---|---|---|---|
| **22.25** | **4584** | **HTsens restart time** | ms | UINT16 | | 20000 | 120 | 60000 | ERW | FVS |

Setting of the time within which the **HT sensor** alarm must be reset in order to perform automatic restart.

| Menu | PAR | Description | UM | Type | FB BIT | Def | Min | Max | Acc | Mod |
|---|---|---|---|---|---|---|---|---|---|---|
| **22.26** | **4600** | **InAir activity** | | ENUM | | Arresto | 0 | 4 | ERW | FVS |

Setting of the behaviour of the drive in case of an intake air overtemperature alarm **InAir**. This alarm indicates that the temperature of the intake cooling air is too high.
**0** Ignore
**1** Warning
**2** Disable
**3** Stop
**4** Fast stop

| Menu | PAR | Description | UM | Type | FB BIT | Def | Min | Max | Acc | Mod |
|---|---|---|---|---|---|---|---|---|---|---|
| **22.27** | **4602** | **InAir restart** | | ENUM | | Disable | 0 | 1 | ERW | FVS |

Enabling of automatic restart after the intake air overtemperature alarm **InAir**.
**0** Disable
**1** Enable

| Menu | PAR | Description | UM | Type | FB BIT | Def | Min | Max | Acc | Mod |
|---|---|---|---|---|---|---|---|---|---|---|
| **22.28** | **4604** | **InAir restart time** | ms | UINT16 | | 1000 | 120 | 30000 | ERW | FVS |

Setting of the time within which the **Intakeair OT** alarm must be reset in order to perform automatic restart.

| Menu | PAR | Description | UM | Type | FB BIT | Def | Min | Max | Acc | Mod |
|---|---|---|---|---|---|---|---|---|---|---|
| **22.29** | **4606** | **InAir holdoff** | ms | UINT16 | | 10000 | 0 | 30000 | ERW | FVS |

Setting of the delay between the signalling of the intake air overtemperature alarm **InAir** and enabling of the alarm. If an alarm condition occurs, the drive will wait for the set time before enabling the alarm. If the alarm is removed within the set time, the drive will not indicate any alarm condition.

| Menu | PAR | Description | UM | Type | FB BIT | Def | Min | Max | Acc | Mod |
|---|---|---|---|---|---|---|---|---|---|---|
| **22.30** | **4610** | **Desat restart** | | ENUM | | Disable | 0 | 1 | ERW | FVS |

Enabling of automatic restart after the desaturation alarm **Desat**. This alarm indicates a short circuit between the motor phases or on the power bridge.
**0** Disable
**1** Enable

| Menu | PAR | Description | UM | Type | FB BIT | Def | Min | Max | Acc | Mod |
|---|---|---|---|---|---|---|---|---|---|---|
| **22.31** | **4612** | **Desat restart time** | ms | UINT16 | | 2000 | 1000 | 10000 | ERW | FVS |

Setting of the time within which the **Desaturation** alarm must be reset in order to perform automatic restart. (Time with alarm signal active + 1000 msec).

| Menu | PAR | Description | UM | Type | FB BIT | Def | Min | Max | Acc | Mod |
|---|---|---|---|---|---|---|---|---|---|---|
| **22.32** | **4620** | **IOverC restart** | | ENUM | | Disable | 0 | 1 | ERW | FVS |

Enabling of automatic restart after the drive **Overcurrent** alarm. This alarm indicates an overcurrent (or short circuit between phases or towards the ground).
**0** Disable
**1** Enable

| Menu | PAR | Description | UM | Type | FB BIT | Def | Min | Max | Acc | Mod |
|---|---|---|---|---|---|---|---|---|---|---|
| **22.33** | **4622** | **IOverC restart time** | ms | UINT16 | | 2000 | 1000 | 10000 | ERW | FVS |

Setting of the time within which the **Overcurrent** alarm must be reset in order to perform automatic restart. (Time with alarm signal active + 1000 msec).

| Menu | PAR | Description | UM | Type | FB BIT | Def | Min | Max | Acc | Mod |
|---|---|---|---|---|---|---|---|---|---|---|
| **22.34** | **4630** | **OverV restart** | | ENUM | | Disable | 0 | 1 | ERW | FVS |

Enabling of automatic restart after the **Overvoltage** alarm. This alarm indicates an overvoltage on the intermediate circuit (DC link)
**0** Disable
**1** Enable

| Menu | PAR | Description | UM | Type | FB BIT | Def | Min | Max | Acc | Mod |
|---|---|---|---|---|---|---|---|---|---|---|
| **22.35** | **4632** | **OverV restart time** | ms | UINT16 | | 2000 | 1000 | 10000 | ERW | FVS |

Setting of the time within which the **Overvoltage** alarm must be reset in order to perform automatic restart. (Time with alarm signal active + 1000 msec).

| Menu | PAR | Description | UM | Type | FB BIT | Def | Min | Max | Acc | Mod |
|---|---|---|---|---|---|---|---|---|---|---|
| **22.36** | **4640** | **UnderV restart** | | ENUM | | Enable | 0 | 1 | ERW | FVS |

Enabling of automatic restart after the **Undervoltage** alarm. This alarm indicates an undervoltage on the intermediate circuit (DC link).
**0** Disable
**1** Enable

| Menu | PAR | Description | UM | Type | FB BIT | Def | Min | Max | Acc | Mod |
|---|---|---|---|---|---|---|---|---|---|---|
| **22.37** | **4642** | **UnderV restart time** | ms | UINT16 | | 1000 | 120 | 10000 | ERW | FVS |

Setting of the time within which the **Undervoltage** alarm must be reset in order to perform automatic restart. (Time with alarm signal active + 100 msec).

| Menu | PAR | Description | UM | Type | FB BIT | Def | Min | Max | Acc | Mod |
|---|---|---|---|---|---|---|---|---|---|---|
| **22.38** | **4650** | **UVRep attempts** | | UINT16 | | 5 | 0 | 1000 | ERW | FVS |

Setting of the maximum number of attempts at automatic restart after the **Undervoltage** alarm before a **Mult Undervoltage alarm** is generated. If this parameter is set to 1000 an infinite number of attempts are available.

| Menu | PAR | Description | UM | Type | FB BIT | Def | Min | Max | Acc | Mod |
|---|---|---|---|---|---|---|---|---|---|---|
| **22.39** | **4652** | **UVRep delay** | s | UINT16 | | 240 | 0 | 300 | ERW | FVS |

Setting of the time within which, if no automatic restarts are executed after the **Undervoltage** alarm, the attempts counter is reset. In this way the number of attempts set in **Underv res attempts** are still available.

| Menu | PAR | Description | UM | Type | FB BIT | Def | Min | Max | Acc | Mod |
|---|---|---|---|---|---|---|---|---|---|---|
| **22.40** | **4660** | **PhLoss activity** | | ENUM | | Disable | 0 | 4 | ERW | FVS |

Setting of the behaviour of the drive in case of a **PhLoss a**larm. This alarm indicates the absence of a drive power supply phase.
**0** Ignore
**1** Warning
**2** Disable
**3** Stop
**4** Fast stop

| Menu | PAR | Description | UM | Type | FB BIT | Def | Min | Max | Acc | Mod |
|---|---|---|---|---|---|---|---|---|---|---|
| **22.41** | **4662** | **PhLoss restart** | | ENUM | | Disable | 0 | 1 | ERW | FVS |

Enabling of automatic restart after the **PhLoss a**larm.
**0** Disable
**1** Enable

| Menu | PAR | Description | UM | Type | FB BIT | Def | Min | Max | Acc | Mod |
|---|---|---|---|---|---|---|---|---|---|---|
| **22.42** | **4664** | **PhLoss restart time** | ms | UINT16 | | 1000 | 120 | 10000 | ERW | FVS |

Setting of the time within which the **Phase loss** alarm must be reset in order to perform automatic restart. (Time with alarm signal active + 100 msec).

| Menu | PAR | Description | UM | Type | FB BIT | Def | Min | Max | Acc | Mod |
|---|---|---|---|---|---|---|---|---|---|---|
| **22.43** | **4668** | **PhLoss output test** | | ENUM | | Enable | 0 | 2 | ERWZ | FVS |

Enabling of the output phase loss test.
**0** Disable
**1** Enable
**2** Powerup

If set to **0** the test is disable

If set to **1** the drive verifies the presence of all the output phases each time it receives the enable command.

If set to **2** the drive only verifies the presence of all the output phases the first time the enable command is sent after powering

**Note!** The motor brake must be closed while running this test!

| Menu | PAR | Description | UM | Type | FB BIT | Def | Min | Max | Acc | Mod |
|---|---|---|---|---|---|---|---|---|---|---|
| **22.44** | **4654** | **Mot PhLoss activity** | | ENUM | | Ignore | 0 | 4 | ERW | FVS |

"Motor Phase Loss" function detect the drop of one phase connecting the drive to the motor. This function works both when the motor is rotating. To configure the Phase Loss function the parameters 4654-4656-4674 and 4678 are available.

The "Motor phase loss" alarm signals the loss of a motor phase. This parameter manages the alarm activity.
**0** Ignore
**1** Warning
**2** Disable
**3** Stop
**4** Fast stop

| Menu | PAR | Description | UM | Type | FB BIT | Def | Min | Max | Acc | Mod |
|---|---|---|---|---|---|---|---|---|---|---|
| **22.45** | **4656** | **Mot PhLoss holdoff** | ms | UINT16 | | 800 | 200 | 10000 | ERW | FVS |

Represents the time the alarm condition has to persist before the alarm is actually generated.

| Menu | PAR | Description | UM | Type | FB BIT | Def | Min | Max | Acc | Mod |
|---|---|---|---|---|---|---|---|---|---|---|
| **22.46** | **4674** | **Mot PhLoss speed thr** | rpm | INT16 | | 10 | 10 | 32000 | ERW | FVS |

In case of failure of the connection between a phase of the motor and the drive, the alarm signal is active when it is exceeded the speed threshold set in this parameter.

It can be used to mask the alarm at very low speed during the start and stop transients when external noise could cause false alarm tripping.

| Menu | PAR | Description | UM | Type | FB BIT | Def | Min | Max | Acc | Mod |
|---|---|---|---|---|---|---|---|---|---|---|
| **22.47** | **4678** | **Mot PhLoss code** | | UINT32 | | 0 | 0 | 0 | ER | FVS |

The hexadecimal value contains information about the type of problem detected and the motor phase where there is the anomaly.

| | |
|---|---|
| 0x0001 | Error detected on phase U with motor running |
| 0x0002 | Error detected on phase V with motor running |
| 0x0004 | Error detected on phase W with motor running |
| 0x0008 | Error detected on phase U with motor running and speed ref loss |
| 0x0010 | Error detected on phase V with motor running and speed ref loss |
| 0x0020 | Error detected on phase W with motor running and speed ref loss |
| 0x0040 | Error detected on phase U during magnetizing stage ( Asynchronous motor only ) |
| 0x0080 | Error detected on phase V during magnetizing stage ( Asynchronous motor only ) |
| 0x0100 | Error detected on phase W during magnetizing stage ( Asynchronous motor only ) |
| 0x0200 | Error detected on phase U with motor disabled (Asynchronous motor only) |
| 0x0400 | Error detected on phase V with motor disabled (Asynchronous motor only) |
| 0x0800 | Error detected on phase W with motor disabled (Asynchronous motor only) |

In some cases it is possible that more bit are showed at the same time. Depending on the type of fault, in fact, if the interruption of one phase makes that even in the other two there is no more current circulation, the dis¬played code indicates the absence of all three phases, while being just one connection failed.

| Menu | PAR | Description | UM | Type | FB BIT | Def | Min | Max | Acc | Mod |
|---|---|---|---|---|---|---|---|---|---|---|
| **22.48** | **4670** | **Optionbus activity** | | ENUM | | Disable | 0 | 4 | ERW | FVS |

Setting of the behaviour of the drive in case of an **"Opt Bus Fault"** alarm.
**0** Ignore

**1** Warning
**2** Disable
**3** Stop
**4** Fast stop

| Menu | PAR | Description | UM | Type | FB BIT | Def | Min | Max | Acc | Mod |
|---|---|---|---|---|---|---|---|---|---|---|
| **22.49** | **4680** | **GroundFault thr** | perc | FLOAT | | 10.0 | 0.0 | 150.0 | ERWS | FVS |

Setting of the threshold for the ground short circuit alarm **Ground Fault**.

| Menu | PAR | Description | UM | Type | FB BIT | Def | Min | Max | Acc | Mod |
|---|---|---|---|---|---|---|---|---|---|---|
| **22.50** | **4700** | **Alarm dig sel 1** | | ENUM | | Nessun allarme | 0 | 40 | ERW | FVS |
| **22.51** | **4702** | **Alarm dig sel 2** | | ENUM | | Nessun allarme | 0 | 40 | ERW | FVS |
| **22.52** | **4704** | **Alarm dig sel 3** | | ENUM | | Nessun allarme | 0 | 40 | ERW | FVS |
| **22.53** | **4706** | **Alarm dig sel 4** | | ENUM | | Nessun allarme | 0 | 40 | ERW | FVS |

Setting of the alarm signal to enable on a digital output. The digital output is selected using parameters **Alm dig out mon 1÷4**, which can be enabled in the **L_DIGSEL1** selection list.

**0** No alarm
**1** Overvoltage
**2** Undervoltage
**3** Ground fault
**4** Overcurrent
**5** Desaturation
**6** MultiUndervolt
**7** MultiOvercurr
**8** MultiDesat
**9** Heatsink OT
**10** HeatsinkS OTUT
**11** Intakeair OT
**12** Motor OT
**13** Drive overload
**14** Motor overload
**15** Bres overload
**16** Phaseloss
**17** Opt Bus fault
**18** Opt 1 IO fault
**19** Opt 2 IO fault
**20** Opt Enc fault
**21** External fault
**22** Speed fbk loss
**23** Overspeed
**24** Speed ref loss
**25** Emg stop alarm
**26** Power down
**27** Phaseloss out
**28** OV safety
**29** Safety failure
**30** Mot phase loss
**31** Ropes change
**32** Not Used
**33** Plc1 fault
**34** Plc2 fault
**35** Plc3 fault
**36** Plc4 fault
**37** Plc5 fault
**38** Plc6 fault
**39** Plc7 fault
**40** Plc8 fault

| Menu | PAR | Description | UM | Type | FB BIT | Def | Min | Max | Acc | Mod |
|---|---|---|---|---|---|---|---|---|---|---|
| **22.54** | **4720** | **Alm autoreset time** | s | FLOAT | | 0.0 | 0.0 | 60.0 | ERW | FVS |

Setting of the time interval that must pass before executing an automatic reset.

If no alarms are enabled the drive is set to restart.

If some alarms are still enabled the drive is set to execute a new attempt at automatic reset.

At each attempted reset a counter increases. If the limit set in the Alm autoreset number parameter is reached the drive is

set to make no more attempts at reset and waits for a user reset.
The counter is set to zero when an automatic reset or user reset is performed and no alarms are enabled.
If the parameter is 0 the function is disabled.

| Menu | PAR | Description | UM | Type | FB BIT | Def | Min | Max | Acc | Mod |
|---|---|---|---|---|---|---|---|---|---|---|
| **22.55** | **4722** | **Alm autoreset number** | | UINT16 | | 20 | 0 | 100 | ERW | FVS |

Setting of the maximum number of attempted automatic resets.

# 23 - ALARM LOG

This is the menu in which the log of previous alarms is saved, with the time the alarm occurred (in relation to the **Time drive power** on parameter). The alarms are displayed starting from the most recent (No. 1) up to the furthest back in time (No. 30). Up to 30 alarm signals can be displayed. The sub-code is used by service technicians to identify the specific type of alarm. Press the ▲ and ▼ keys to scroll the screen pages of the alarm log. The alarm log cannot be deleted.

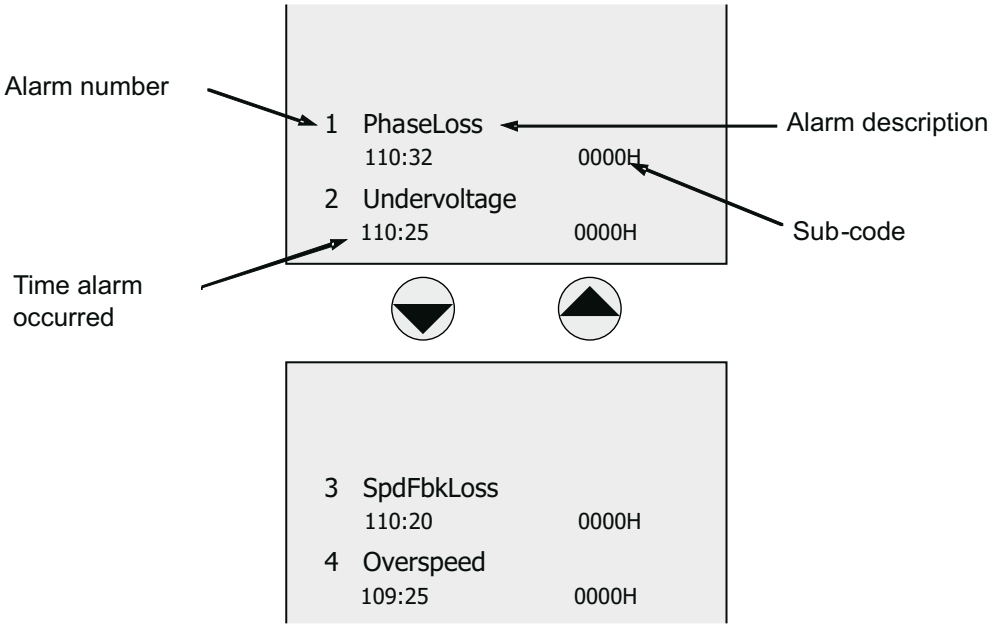

# PARAMETERS ON SELECTION LISTS, BUT NOT DISPLAYED ON KEYPAD

This list reports the parameters that are not displayed in the keyboard while they are part of the selection lists. These parameters can be used as SOURCE of the input signals for the function block. (Refer to section A – Programming).

| Menu | PAR | Description | UM | Type | FB BIT | Def | Min | Max | Acc | Mod |
|---|---|---|---|---|---|---|---|---|---|---|
| - | 262 | **Motor speed nofilter** | rpm | INT16 | 16BIT | 0 | 0 | 0 | ER | FVS |
| | | This parameter indicates the unfiltered motor speed. | | | | | | | | |

| Menu | PAR | Description | UM | Type | FB BIT | Def | Min | Max | Acc | Mod |
|---|---|---|---|---|---|---|---|---|---|---|
| - | 362 | **Drive overload trip** | | BIT | 16BIT | 0 | 0 | 1 | ER | FVS |
| | | This signal indicates that the drive is in the overload alarm condition. | | | | | | | | |

| Menu | PAR | Description | UM | Type | FB BIT | Def | Min | Max | Acc | Mod |
|---|---|---|---|---|---|---|---|---|---|---|
| - | 366 | **Drive overload 80%** | | BIT | 16BIT | 0 | 0 | 1 | ER | FVS |
| | | This signal indicates that the drive has reached 80% of the thermal image accumulator (drive overload). | | | | | | | | |

| Menu | PAR | Description | UM | Type | FB BIT | Def | Min | Max | Acc | Mod |
|---|---|---|---|---|---|---|---|---|---|---|
| - | 626 | **Ramp ref out mon** | rpm | INT16 | 16BIT | 0 | 0 | 0 | ER | FVS |
| | | This parameter displays the reference value output of the ramp remference function block. | | | | | | | | |

| Menu | PAR | Description | UM | Type | FB BIT | Def | Min | Max | Acc | Mod |
|---|---|---|---|---|---|---|---|---|---|---|
| - | 760 | **Ramp out mon** | rpm | INT16 | 16BIT | 0 | 0 | 0 | ER | FVS |
| | | This parameter displays the reference value output of the ramp function block. | | | | | | | | |

| Menu | PAR | Description | UM | Type | FB BIT | Def | Min | Max | Acc | Mod |
|---|---|---|---|---|---|---|---|---|---|---|
| - | 764 | **Ramp acc state** | | BIT | 16BIT | 0 | 0 | 1 | ER | FVS |
| | | This signal indicates whether the acceleration ramp is active. | | | | | | | | |

| Menu | PAR | Description | UM | Type | FB BIT | Def | Min | Max | Acc | Mod |
|---|---|---|---|---|---|---|---|---|---|---|
| - | 766 | **Ramp dec state** | | BIT | 16BIT | 0 | 0 | 1 | ER | FVS |
| | | This signal indicates whether the deceleration ramp is active. | | | | | | | | |

| Menu | PAR | Description | UM | Type | FB BIT | Def | Min | Max | Acc | Mod |
|---|---|---|---|---|---|---|---|---|---|---|
| - | 934 | **Ref is 0** | | BIT | 16BIT | 0 | 0 | 1 | ER | FVS |
| | | This signal is active when the reference is below the limit set in parameter **930 Reference 0 threshold**. | | | | | | | | |

| Menu | PAR | Description | UM | Type | FB BIT | Def | Min | Max | Acc | Mod |
|---|---|---|---|---|---|---|---|---|---|---|
| - | 936 | **Ref is 0 delay** | | BIT | 16BIT | 0 | 0 | 1 | ER | FVS |
| | | This parameter is active when the reference is below the threshold set in parameter **930 Reference 0 threshold**. The signal is enabled after the delay set with parameter **932 Reference delay 0**. | | | | | | | | |

| Menu | PAR | Description | UM | Type | FB BIT | Def | Min | Max | Acc | Mod |
|---|---|---|---|---|---|---|---|---|---|---|
| - | 944 | **Speed is 0** | | BIT | 16BIT | 0 | 0 | 1 | ER | FVS |
| | | This parameter is active when the speed is below the threshold set in parameter **940 Speed 0 threshold**. | | | | | | | | |

| Menu | PAR | Description | UM | Type | FB BIT | Def | Min | Max | Acc | Mod |
|---|---|---|---|---|---|---|---|---|---|---|
| - | 946 | **Speed is 0 delay** | | BIT | 16BIT | 0 | 0 | 1 | ER | FVS |
| | | This signal is active when the reference is below the threshold set in parameter **940 Speed 0 threshold**. The signal is activated after the delay set in parameter **942 Speed 0 delay**. | | | | | | | | |

| Menu | PAR | Description | UM | Type | FB BIT | Def | Min | Max | Acc | Mod |
|---|---|---|---|---|---|---|---|---|---|---|
| - | 1060 | **Sequencer status** | | UINT16 | 16BIT | 0 | 0 | 0 | ER | FVS |

This signal indicates the state of the “machine states” that controls drive operation.

| | |
|---|---|
| STS_INIT | 0 |
| STS_MAGN | 1 |
| STS_STOP | 2 |
| STS_START | 3 |
| STS_FS_STOP | 4 |
| STS_FS_START | 5 |
| STS_QSTOP | 6 |
| STS_FS_MAGN | 7 |
| STS_W_QSTOP | 8 |
| STS_READY | 9 |
| STS_MAGN_START | 10 |
| STS_ALM_DISABLED | 11 |
| STS_ALM_END_ACTION | 12 |
| STS_ALM_STOP | 13 |
| STS_ALM_FSTOP | 14 |
| STS_ALM_R_TO_NORMAL | 15 |
| STS_READY_START | 16 |
| STS_READY_FSTOP | 17 |
| STS_ALM_NO_RESTART | 18 |
| STS_FS_MAGN_START | 19 |

| Menu | PAR | Description | UM | Type | FB BIT | Def | Min | Max | Acc | Mod |
|---|---|---|---|---|---|---|---|---|---|---|
| - | **1062** | **Drive OK** | | BIT | 16BIT | 0 | 0 | 1 | ER | FVS |

This signal is active when the drive is in the “**OK**” condition and no alarms are present.

| Menu | PAR | Description | UM | Type | FB BIT | Def | Min | Max | Acc | Mod |
|---|---|---|---|---|---|---|---|---|---|---|
| - | **1064** | **Drive ready** | | BIT | 16BIT | 0 | 0 | 1 | ER | FVS |

This signal is active when the drive reference is in the “Ready” to run condition.

| Menu | PAR | Description | UM | Type | FB BIT | Def | Min | Max | Acc | Mod |
|---|---|---|---|---|---|---|---|---|---|---|
| - | **1110** | **Digital input E mon** | | BIT | 16BIT | 0 | 0 | 1 | ER | FVS |

These signals represent the state of the corresponding digital input.

| Menu | PAR | Description | UM | Type | FB BIT | Def | Min | Max | Acc | Mod |
|---|---|---|---|---|---|---|---|---|---|---|
| - | **1210** | **Digital input 1X mon** | | BIT | 16BIT | 0 | 0 | 1 | ER | FVS |
| - | **1212** | **Digital input 2X mon** | | BIT | 16BIT | 0 | 0 | 1 | ER | FVS |
| - | **1214** | **Digital input 3X mon** | | BIT | 16BIT | 0 | 0 | 1 | ER | FVS |
| - | **1216** | **Digital input 4X mon** | | BIT | 16BIT | 0 | 0 | 1 | ER | FVS |
| - | **1218** | **Digital input 5X mon** | | BIT | 16BIT | 0 | 0 | 1 | ER | FVS |
| - | **1220** | **Digital input 6X mon** | | BIT | 16BIT | 0 | 0 | 1 | ER | FVS |
| - | **1222** | **Digital input 7X mon** | | BIT | 16BIT | 0 | 0 | 1 | ER | FVS |
| - | **1224** | **Digital input 8X mon** | | BIT | 16BIT | 0 | 0 | 1 | ER | FVS |
| - | **1226** | **Digital input 9X mon** | | BIT | 16BIT | 0 | 0 | 1 | ER | FVS |
| - | **1228** | **Digital input 10X mon** | | BIT | 16BIT | 0 | 0 | 1 | ER | FVS |
| - | **1230** | **Digital input 11X mon** | | BIT | 16BIT | 0 | 0 | 1 | ER | FVS |
| - | **1232** | **Digital input 12X mon** | | BIT | 16BIT | 0 | 0 | 1 | ER | FVS |

These signals represent the state of the corresponding digital input on the expansion card.

| Menu | PAR | Description | UM | Type | FB BIT | Def | Min | Max | Acc | Mod |
|---|---|---|---|---|---|---|---|---|---|---|
| - | **2388** | **Torque ref nofilter** | perc | FLOAT | 16BIT | 0.0 | 0.0 | 0.0 | ER | FVS |

The torque control reference current without filter is displayed (in sensorless vector and field-oriented vector mode).

| Menu | PAR | Description | UM | Type | FB BIT | Def | Min | Max | Acc | Mod |
|---|---|---|---|---|---|---|---|---|---|---|
| - | 3214 | **Motor overload trip** | | BIT | 16BIT | 0 | 0 | 1 | ER | FVS |

This signal is active when the drive is in the motor overload alarm condition.

| Menu | PAR | Description | UM | Type | FB BIT | Def | Min | Max | Acc | Mod |
|---|---|---|---|---|---|---|---|---|---|---|
| - | 3262 | **Bres overload trip** | | BIT | 16BIT | 0 | 0 | 1 | ER | FVS |

This signal is active when the drive is in the braking resistor overload alarm condition.

| Menu | PAR | Description | UM | Type | FB BIT | Def | Min | Max | Acc | Mod |
|---|---|---|---|---|---|---|---|---|---|---|
| - | 3422 | **Direction change mon** | | BIT | 16BIT | 0 | 0 | 1 | ER | FVS |

This signal stays on for one second each time the drive detects a direction change and thus decrements the counter.
This signal is inserted in the L_DIGSEL1 selection list and can be brought to a digital output.

| Menu | PAR | Description | UM | Type | FB BIT | Def | Min | Max | Acc | Mod |
|---|---|---|---|---|---|---|---|---|---|---|
| - | 3424 | **Dir change cnt zero** | | BIT | 16BIT | 0 | 0 | 1 | ER | FVS |

This signal activates when the drive is locked because 3414 **Direction counter** has reached 0.
This signal is inserted in the L_DIGSEL1 selection list and can be brought to a digital output.

| Menu | PAR | Description | UM | Type | FB BIT | Def | Min | Max | Acc | Mod |
|---|---|---|---|---|---|---|---|---|---|---|
| - | 4708 | **Alm dig out mon 1** | | BIT | 16BIT | 0 | 0 | 1 | ER | FVS |

This signal is activated when the alarm configured in parameter **4700 alarm dig sel 1** is active.

| Menu | PAR | Description | UM | Type | FB BIT | Def | Min | Max | Acc | Mod |
|---|---|---|---|---|---|---|---|---|---|---|
| - | 4710 | **Alm dig out mon 2** | | BIT | 16BIT | 0 | 0 | 1 | ER | FVS |

This signal is activated when the alarm configured in parameter **4702 alarm dig sel 2** is active.

| Menu | PAR | Description | UM | Type | FB BIT | Def | Min | Max | Acc | Mod |
|---|---|---|---|---|---|---|---|---|---|---|
| - | 4712 | **Alm dig out mon 3** | | BIT | 16BIT | 0 | 0 | 1 | ER | FVS |

This signal is activated when the alarm configured in parameter **4704 alarm dig sel 3** is active.

| Menu | PAR | Description | UM | Type | FB BIT | Def | Min | Max | Acc | Mod |
|---|---|---|---|---|---|---|---|---|---|---|
| - | 4714 | **Alm dig out mon 4** | | BIT | 16BIT | 0 | 0 | 1 | ER | FVS |

This signal is activated when the alarm configured in parameter **4706 alarm dig sel 4** is active.

| Menu | PAR | Description | UM | Type | FB BIT | Def | Min | Max | Acc | Mod |
|---|---|---|---|---|---|---|---|---|---|---|
| - | 4770 | **First alarm** | | UINT32 | 16BIT | 0 | 0 | 0 | ERW | FVS |

This parameter displays the first alarm to be activated..

**0** No alarm
**1** Overvoltage
**2** Undervoltage
**3** Ground fault
**4** Overcurrent
**5** Desaturation
**6** MultiUndervolt
**7** MultiOvercurr
**8** MultiDesat
**9** Heatsink OT
**10** HeatsinkS OTUT
**11** Intakeair OT
**12** Motor OT
**13** Drive overload
**14** Motor overload
**15** Bres overload
**16** Phaseloss
**17** Opt Bus fault
**18** Opt 1 IO fault
**19** Opt 2 IO fault
**20** Opt Enc fault

**21** External fault
**22** Speed fbk loss
**23** Overspeed
**24** Speed ref loss
**25** Emg stop alarm
**26** Power down
**27** Phaseloss out
**28** OV safety
**29** Safety failure
**30** Mot phase loss
**31** Ropes change
**32** Not Used
**33** Plc1 fault
**34** Plc2 fault
**35** Plc3 fault
**36** Plc4 fault
**37** Plc5 fault
**38** Plc6 fault
**39** Plc7 fault
**40** Plc8 faul

| Menu | PAR | Description | UM | Type | FB BIT | Def | Min | Max | Acc | Mod |
|---|---|---|---|---|---|---|---|---|---|---|
| - | **4780** | **Alarm PLC** | | UINT16 | | 0 | 0 | 0 | ER | FVS |

This parameter displays the state of the alarms generated by the application written with the internal PLC.

| Bit | Description |
|---|---|
| 0 | 1 = PLC 1 fault active |
| 1 | 1 = PLC 2 fault active |
| 2 | 1 = PLC 3 fault active |
| 3 | 1 = PLC 4 fault active |
| 4 | 1 = PLC 5 fault active |
| 5 | 1 = PLC 6 fault active |
| 6 | 1 = PLC 7 fault active |
| 7 | 1 = PLC 8 fault active |

| Menu | PAR | Description | UM | Type | FB BIT | Def | Min | Max | Acc | Mod |
|---|---|---|---|---|---|---|---|---|---|---|
| - | **6000** | **Null** | | UINT32 | 32BIT | 0 | 0 | 0 | ER | FVS |

This signal forces the variable to the zero level (always disabled).

| Menu | PAR | Description | UM | Type | FB BIT | Def | Min | Max | Acc | Mod |
|---|---|---|---|---|---|---|---|---|---|---|
| - | **6002** | **One** | | UINT32 | 32BIT | 1 | 1 | 1 | ER | FVS |

This signal forces the variable to level one (always active)..

| Menu | PAR | Description | UM | Type | FB BIT | Def | Min | Max | Acc | Mod |
|---|---|---|---|---|---|---|---|---|---|---|
| - | **6006** | **Current limit state** | | BIT | 16BIT | 0 | 0 | 1 | ER | FVS |

This signal is activated when the drive is in the current limit condition.

| Menu | PAR | Description | UM | Type | FB BIT | Def | Min | Max | Acc | Mod |
|---|---|---|---|---|---|---|---|---|---|---|
| - | **6372** | **DS417 status word** | | UINT16 | 16BIT | 0 | 0 | 65535 | ER | FVS |

This parameter displays the status word according to the DS417 Profile. For more information reference should be made to the fieldbus manual.

## L_ANOUT

| PAR | Description | Menu |
|---|---|---|
| 6000 | Null | (*) |
| 626 | Ramp ref out mon | (*) |
| 760 | Ramp out mon | (*) |
| 664 | Speed setpoint | 1.5 |
| 260 | Motor speed | 1.6 |
| 262 | Motor speed nofilter | (*) |
| 2150 | Encoder speed | 15.11 |
| 250 | Output current | 1.1 |
| 252 | Output voltage | 1.2 |
| 254 | Output frequency | 1.3 |
| 280 | Torque current ref | 1.9 |
| 282 | Magnet current ref | 1.10 |
| 284 | Torque current | 1.11 |
| 286 | Magnet current | 1.12 |
| 2360 | Torque climPos Inuse | 18.5 |
| 2362 | Torque climNeg Inuse | 18.6 |
| 2386 | Torque ref | 18.10 |
| 2388 | Torque ref nofilter | (*) |
| 270 | DC link voltage | 1.7 |
| 3104 | Inertia comp mon | 20.1.3 |
| 1600 | Analog input 1X mon | 12.1 |
| 1650 | Analog input 2X mon | 12.12 |
| 368 | Drive overload accum | 1.14 |
| 3212 | Motor overload accum | 1.13 |
| 3260 | Bres overload accum | 1.15 |
| 2232 | Spd reg P gain Inuse | 16.16 |
| 2234 | Spd reg I gain Inuse | 16.17 |
| 4024 | Fieldbus M->S1 mon | 21.3.3 |
| 4034 | Fieldbus M->S2 mon | 21.3.7 |
| 4044 | Fieldbus M->S3 mon | 21.3.11 |
| 4054 | Fieldbus M->S4 mon | 21.3.15 |
| 4064 | Fieldbus M->S5 mon | 21.3.19 |
| 4074 | Fieldbus M->S6 mon | 21.3.23 |
| 4084 | Fieldbus M->S7 mon | 21.3.27 |
| 4094 | Fieldbus M->S8 mon | 21.3.31 |
| 4104 | Fieldbus M->S9 mon | 21.3.35 |
| 4114 | Fieldbus M->S10 mon | 21.3.39 |
| 4124 | Fieldbus M->S11 mon | 21.3.43 |
| 4134 | Fieldbus M->S12 mon | 21.3.47 |
| 4144 | Fieldbus M->S13 mon | 21.3.51 |
| 4154 | Fieldbus M->S14 mon | 21.3.55 |
| 4164 | Fieldbus M->S15 mon | 21.3.59 |
| 4174 | Fieldbus M->S16 mon | 21.3.63 |
| 3700 | Lift enable | 20.8.1 |
| 3702 | Run cont mon | 20.8.2 |
| 3704 | Up cont mon | 20.8.3 |
| 3706 | Down cont mon | 20.8.4 |
| 3708 | Brake cont mon | 20.8.5 |
| 3710 | Lift dc brake | 20.8.6 |
| 3712 | Brake 2 mon | 20.8.7 |
| 3714 | Door open mon | 20.8.8 |
| 3716 | Lift start | 20.8.9 |
| 3718 | Pad 10 | 20.8.10 |
| 3720 | Lift status word | 20.8.11 |
| 3722 | Pad 12 | 20.8.12 |
| 3724 | Pad 13 | 20.8.13 |
| 3726 | Ramp down limit | 20.8.14 |
| 3728 | PAD 15 | 20.8.15 |
| 3730 | Lift wdec input | 20.8.16 |
| 5008 | Test gen out | 24.1.5 |

## L_CMP

| PAR | Description | Menu |
|---|---|---|
| *XXXX* | (1) | |
| 626 | Ramp ref out mon | (*) |
| 760 | Ramp out mon | (*) |
| 664 | Speed setpoint | 1.5 |
| 260 | Motor speed | 1.6 |
| 262 | Motor speed nofilter | (*) |
| 2150 | Encoder speed | 15.11 |
| 250 | Output current | 1.1 |
| 252 | Output voltage | 1.2 |
| 254 | Output frequency | 1.3 |
| 280 | Torque current ref | 1.9 |
| 282 | Magnet current ref | 1.10 |
| 284 | Torque current | 1.11 |
| 286 | Magnet current | 1.12 |
| 2386 | Torque ref | 18.10 |
| 2388 | Torque ref nofilter | (*) |
| 270 | DC link voltage | 1.7 |
| 1600 | Analog input 1X mon | 12.1 |
| 1650 | Analog input 2X mon | 12.12 |
| 368 | Drive overload accum | 1.14 |
| 3212 | Motor overload accum | 1.13 |
| 3260 | Bres overload accum | 1.15 |
| 4024 | Fieldbus M->S1 mon | 21.3.3 |
| 4034 | Fieldbus M->S2 mon | 21.3.7 |
| 4044 | Fieldbus M->S3 mon | 21.3.11 |
| 4054 | Fieldbus M->S4 mon | 21.3.15 |
| 4064 | Fieldbus M->S5 mon | 21.3.19 |
| 4074 | Fieldbus M->S6 mon | 21.3.23 |
| 4084 | Fieldbus M->S7 mon | 21.3.27 |
| 4094 | Fieldbus M->S8 mon | 21.3.31 |
| 4104 | Fieldbus M->S9 mon | 21.3.35 |
| 4114 | Fieldbus M->S10 mon | 21.3.39 |
| 4124 | Fieldbus M->S11 mon | 21.3.43 |
| 4134 | Fieldbus M->S12 mon | 21.3.47 |
| 4144 | Fieldbus M->S13 mon | 21.3.51 |
| 4154 | Fieldbus M->S14 mon | 21.3.55 |
| 4164 | Fieldbus M->S15 mon | 21.3.59 |
| 4174 | Fieldbus M->S16 mon | 21.3.63 |
| 3700 | Lift enable | 20.8.1 |
| 3702 | Run cont mon | 20.8.2 |
| 3704 | Up cont mon | 20.8.3 |
| 3706 | Down cont mon | 20.8.4 |
| 3708 | Brake cont mon | 20.8.5 |
| 3710 | Lift dc brake | 20.8.6 |
| 3712 | Brake 2 mon | 20.8.7 |
| 3714 | Door open mon | 20.8.8 |
| 3716 | Lift start | 20.8.9 |
| 3718 | Pad 10 | 20.8.10 |
| 3720 | Lift status word | 20.8.11 |
| 3722 | Pad 12 | 20.8.12 |
| 3724 | Pad 13 | 20.8.13 |
| 3726 | Ramp down limit | 20.8.14 |
| 3728 | PAD 15 | 20.8.15 |
| 3730 | Lift wdec input | 20.8.16 |

(1) the XXXX parameter changes according to the src parameter used:

3660 Compare input 1 src
(1) = 3650 Dig compare input 1 20.7.1

3662 Compare input 2 src
(1) = 3652 Dig compare input 2 20.7.2

## L_DIGSEL1

| PAR | Description | Menu |
|---|---|---|
| 6000 | Null | (*) |
| 6002 | One | (*) |
| 1110 | Digital input E mon | (*) |
| 1210 | Digital input 1X mon | (*) |
| 1212 | Digital input 2X mon | (*) |
| 1214 | Digital input 3X mon | (*) |
| 1216 | Digital input 4X mon | (*) |
| 1218 | Digital input 5X mon | (*) |
| 1220 | Digital input 6X mon | (*) |
| 1222 | Digital input 7X mon | (*) |
| 1224 | Digital input 8X mon | (*) |
| 1226 | Digital input 9X mon | (*) |
| 1228 | Digital input10X mon | (*) |
| 1230 | Digital input11X mon | (*) |
| 1232 | Digital input12X mon | (*) |
| 1062 | Drive OK | (*) |
| 1064 | Drive ready | (*) |
| 934 | Ref is 0 | (*) |
| 936 | Ref is 0 delay | (*) |
| 944 | Speed is 0 | (*) |
| 946 | Speed is 0 delay | (*) |
| 1066 | Enable state mon | 1.16 |
| 1068 | Start state mon | 1.17 |
| 1070 | FastStop state mon | 1.18 |
| 1024 | Enable cmd mon | 9.9 |
| 1026 | Start cmd mon | 9.10 |
| 1028 | FastStop cmd mon | 9.11 |
| 4708 | Alm dig out mon 1 | (*) |
| 4710 | Alm dig out mon 2 | (*) |
| 4712 | Alm dig out mon 3 | (*) |
| 4714 | Alm dig out mon 4 | (*) |
| 362 | Drive overload trip | (*) |
| 3214 | Motor overload trip | (*) |
| 3262 | Bres overload trip | (*) |
| 366 | Drive overload 80% | (*) |
| 4454 | Bit0 decomp mon | 21.6.3 |
| 4456 | Bit1 decomp mon | 21.6.4 |
| 4458 | Bit2 decomp mon | 21.6.5 |
| 4460 | Bit3 decomp mon | 21.6.6 |
| 4462 | Bit4 decomp mon | 21.6.7 |
| 4464 | Bit5 decomp mon | 21.6.8 |
| 4466 | Bit6 decomp mon | 21.6.9 |
| 4468 | Bit7 decomp mon | 21.6.10 |
| 4470 | Bit8 decomp mon | 21.6.11 |
| 4472 | Bit9 decomp mon | 21.6.12 |
| 4474 | Bit10 decomp mon | 21.6.13 |
| 4476 | Bit11 decomp mon | 21.6.14 |
| 4478 | Bit12 decomp mon | 21.6.15 |
| 4480 | Bit13 decomp mon | 21.6.16 |
| 4482 | Bit14 decomp mon | 21.6.17 |
| 4484 | Bit15 decomp mon | 21.6.18 |
| 3700 | Lift enable | 20.8.1 |
| 3702 | Run cont mon | 20.8.2 |
| 3704 | Up cont mon | 20.8.3 |
| 3706 | Down cont mon | 20.8.4 |
| 3708 | Brake cont mon | 20.8.5 |
| 3710 | Lift dc brake | 20.8.6 |
| 3712 | Brake 2 mon | 20.8.7 |
| 3714 | Door open mon | 20.8.8 |
| 3716 | Lift start | 20.8.9 |
| 3718 | Pad 10 | 20.8.10 |
| 3720 | Lift status word | 20.8.11 |
| 3722 | Pad 12 | 20.8.12 |
| 3724 | Pad 13 | 20.8.13 |
| 3726 | Ramp down limit | 20.8.14 |
| 3728 | PAD 15 | 20.8.15 |
| 3730 | Lift wdec input | 20.8.16 |
| 6006 | Current limit state | (*) |
| 764 | Ramp acc state | (*) |
| 766 | Ramp dec state | (*) |
| 4780 | Alarm PLC | (*) |
| 3676 | Compare output | 20.7.8 |
| 3420 | Ropes change req mon | 20.9.11 |

| PAR | Description | Menu |
|---|---|---|
| 3422 | Direction change mon | (*) |
| 3424 | Dir change cnt zero | (*) |

## L_DIGSEL2

| | | |
|---|---|---|
| 6000 | Null | (*) |
| 6002 | One | (*) |
| 1110 | Digital input E mon | (*) |
| 1210 | Digital input 1X mon | (*) |
| 1212 | Digital input 2X mon | (*) |
| 1214 | Digital input 3X mon | (*) |
| 1216 | Digital input 4X mon | (*) |
| 1218 | Digital input 5X mon | (*) |
| 1220 | Digital input 6X mon | (*) |
| 1222 | Digital input 7X mon | (*) |
| 1224 | Digital input 8X mon | (*) |
| 1226 | Digital input 9X mon | (*) |
| 1228 | Digital input10X mon | (*) |
| 1230 | Digital input11X mon | (*) |
| 1232 | Digital input12X mon | (*) |
| 4454 | Bit0 decomp mon | 21.6.3 |
| 4456 | Bit1 decomp mon | 21.6.4 |
| 4458 | Bit2 decomp mon | 21.6.5 |
| 4460 | Bit3 decomp mon | 21.6.6 |
| 4462 | Bit4 decomp mon | 21.6.7 |
| 4464 | Bit5 decomp mon | 21.6.8 |
| 4466 | Bit6 decomp mon | 21.6.9 |
| 4468 | Bit7 decomp mon | 21.6.10 |
| 4470 | Bit8 decomp mon | 21.6.11 |
| 4472 | Bit9 decomp mon | 21.6.12 |
| 4474 | Bit10 decomp mon | 21.6.13 |
| 4476 | Bit11 decomp mon | 21.6.14 |
| 4478 | Bit12 decomp mon | 21.6.15 |
| 4480 | Bit13 decomp mon | 21.6.16 |
| 4482 | Bit14 decomp mon | 21.6.17 |
| 4484 | Bit15 decomp mon | 21.6.18 |
| 3700 | Lift enable | 20.8.1 |
| 3702 | Run cont mon | 20.8.2 |
| 3704 | Up cont mon | 20.8.3 |
| 3706 | Down cont mon | 20.8.4 |
| 3708 | Brake cont mon | 20.8.5 |
| 3710 | Lift dc brake | 20.8.6 |
| 3712 | Brake 2 mon | 20.8.7 |
| 3714 | Door open mon | 20.8.8 |
| 3716 | Lift start | 20.8.9 |
| 3718 | Pad 10 | 20.8.10 |
| 3720 | Lift status word | 20.8.11 |
| 3722 | Pad 12 | 20.8.12 |
| 3724 | Pad 13 | 20.8.13 |
| 3726 | Ramp down limit | 20.8.14 |
| 3728 | PAD 15 | 20.8.15 |
| 3730 | Lift wdec input | 20.8.16 |
| 3676 | Compare output | 20.7.8 |

## L_DIGSEL3

| | | |
|---|---|---|
| *XXXX* | (2) | |
| 6000 | Null | (*) |
| 1218 | Digital input 5X mon | (*) |
| 1220 | Digital input 6X mon | (*) |
| 1222 | Digital input 7X mon | (*) |
| 1224 | Digital input 8X mon | (*) |
| 1226 | Digital input 9X mon | (*) |
| 1228 | Digital input10X mon | (*) |
| 1230 | Digital input11X mon | (*) |
| 1232 | Digital input12X mon | (*) |
| 1062 | Drive OK | (*) |
| 1064 | Drive ready | (*) |
| 934 | Ref is 0 | (*) |
| 936 | Ref is 0 delay | (*) |
| 944 | Speed is 0 | (*) |
| 946 | Speed is 0 delay | (*) |
| 1066 | Enable state mon | 1.16 |
| 1068 | Start state mon | 1.17 |
| 1070 | FastStop state mon | 1.18 |
| 1024 | Enable cmd mon | 9.9 |
| 1026 | Start cmd mon | 9.10 |
| 1028 | FastStop cmd mon | 9.11 |
| 4708 | Alm dig out mon 1 | (*) |
| 4710 | Alm dig out mon 2 | (*) |
| 4712 | Alm dig out mon 3 | (*) |
| 4714 | Alm dig out mon 4 | (*) |
| 362 | Drive overload trip | (*) |
| 3214 | Motor overload trip | (*) |
| 3262 | Bres overload trip | (*) |
| 366 | Drive overload 80% | (*) |
| 4454 | Bit0 decomp mon | 21.6.3 |
| 4456 | Bit1 decomp mon | 21.6.4 |
| 4458 | Bit2 decomp mon | 21.6.5 |
| 4460 | Bit3 decomp mon | 21.6.6 |
| 4462 | Bit4 decomp mon | 21.6.7 |
| 4464 | Bit5 decomp mon | 21.6.8 |
| 4466 | Bit6 decomp mon | 21.6.9 |
| 4468 | Bit7 decomp mon | 21.6.10 |
| 4470 | Bit8 decomp mon | 21.6.11 |
| 4472 | Bit9 decomp mon | 21.6.12 |
| 4474 | Bit10 decomp mon | 21.6.13 |
| 4476 | Bit11 decomp mon | 21.6.14 |
| 4478 | Bit12 decomp mon | 21.6.15 |
| 4480 | Bit13 decomp mon | 21.6.16 |
| 4482 | Bit14 decomp mon | 21.6.17 |
| 4484 | Bit15 decomp mon | 21.6.18 |
| 3700 | Lift enable | 20.8.1 |
| 3702 | Run cont mon | 20.8.2 |
| 3704 | Up cont mon | 20.8.3 |
| 3706 | Down cont mon | 20.8.4 |
| 3708 | Brake cont mon | 20.8.5 |
| 3710 | Lift dc brake | 20.8.6 |
| 3712 | Brake 2 mon | 20.8.7 |
| 3714 | Door open mon | 20.8.8 |
| 3716 | Lift start | 20.8.9 |
| 3718 | Pad 10 | 20.8.10 |
| 3720 | Lift status word | 20.8.11 |
| 3722 | Pad 12 | 20.8.12 |
| 3724 | Pad 13 | 20.8.13 |
| 3726 | Ramp down limit | 20.8.14 |
| 3728 | PAD 15 | 20.8.15 |
| 3730 | Lift wdec input | 20.8.16 |
| 6006 | Current limit state | (*) |
| 764 | Ramp acc state | (*) |
| 766 | Ramp dec state | (*) |
| 4780 | Alarm PLC | (*) |
| 3676 | Compare output | 20.7.8 |

(2) the XXXX parameter changes according to the src parameter used:

1014 Local/remote src
(2) = 1012 Dig local/remote (*)

## L_FBS2M

| | | |
|---|---|---|
| *XXXX* | (3) | |
| 6000 | Null | (*) |
| 6002 | One | (*) |
| 626 | Ramp ref out mon | (*) |
| 760 | Ramp out mon | (*) |
| 664 | Speed setpoint | 1.5 |
| 260 | Motor speed | 1.6 |
| 262 | Motor speed nofilter | (*) |
| 2150 | Encoder speed | 15.11 |
| 250 | Output current | 1.1 |
| 252 | Output voltage | 1.2 |
| 254 | Output frequency | 1.3 |
| 280 | Torque current ref | 1.9 |
| 282 | Magnet current ref | 1.10 |
| 284 | Torque current | 1.11 |
| 286 | Magnet current | 1.12 |
| 2360 | Torque climPos Inuse | 18.5 |
| 2362 | Torque climNeg Inuse | 18.6 |
| 2386 | Torque ref | 18.10 |
| 2388 | Torque ref nofilter | (*) |
| 270 | DC link voltage | 1.7 |
| 2162 | Encoder position | 15.12 |
| 2154 | Virtual position | 24.3.2 |
| 2156 | Revolutions | 24.3.3 |
| 3104 | Inertia comp mon | 20.1.3 |
| 1600 | Analog input 1X mon | 12.1 |
| 1650 | Analog input 2X mon | 12.12 |
| 368 | Drive overload accum | 1.14 |
| 3212 | Motor overload accum | 1.13 |
| 3260 | Bres overload accum | 1.15 |
| 272 | Heatsink temperature | 1.8 |
| 1060 | Sequencer status | (*) |
| 4432 | Word comp mon | 21.5.17 |
| 6372 | DS417 status word | (*) |
| 4024 | Fieldbus M->S1 mon | 21.3.3 |
| 4034 | Fieldbus M->S2 mon | 21.3.7 |
| 4044 | Fieldbus M->S3 mon | 21.3.11 |
| 4054 | Fieldbus M->S4 mon | 21.3.15 |
| 4064 | Fieldbus M->S5 mon | 21.3.19 |
| 4074 | Fieldbus M->S6 mon | 21.3.23 |
| 4084 | Fieldbus M->S7 mon | 21.3.27 |
| 4094 | Fieldbus M->S8 mon | 21.3.31 |
| 4104 | Fieldbus M->S9 mon | 21.3.35 |
| 4114 | Fieldbus M->S10 mon | 21.3.39 |
| 4124 | Fieldbus M->S11 mon | 21.3.43 |
| 4134 | Fieldbus M->S12 mon | 21.3.47 |
| 4144 | Fieldbus M->S13 mon | 21.3.51 |
| 4154 | Fieldbus M->S14 mon | 21.3.55 |
| 4164 | Fieldbus M->S15 mon | 21.3.59 |
| 4174 | Fieldbus M->S16 mon | 21.3.63 |
| 3700 | Lift enable | 20.8.1 |
| 3702 | Run cont mon | 20.8.2 |
| 3704 | Up cont mon | 20.8.3 |
| 3706 | Down cont mon | 20.8.4 |
| 3708 | Brake cont mon | 20.8.5 |
| 3710 | Lift dc brake | 20.8.6 |
| 3712 | Brake 2 mon | 20.8.7 |
| 3714 | Door open mon | 20.8.8 |
| 3716 | Lift start | 20.8.9 |
| 3718 | Pad 10 | 20.8.10 |
| 3720 | Lift status word | 20.8.11 |
| 3722 | Pad 12 | 20.8.12 |
| 3724 | Pad 13 | 20.8.13 |
| 3726 | Ramp down limit | 20.8.14 |
| 3728 | PAD 15 | 20.8.15 |
| 3730 | Lift wdec input | 20.8.16 |
| 4770 | First alarm | (*) |
| 1200 | Digital input X mon | 1.19 |
| 5008 | Test gen out | 24.1.5 |

| PAR | Description | Menu |
|---|---|---|

(3) the XXXX parameter changes according to the src parameter used:

6340 DS417 cw src
(3) = 4024 Fieldbus M->S1 mon 21.3.3

6380 DS417 key src
(3) = 4024 Fieldbus M->S1 mon 21.3.3

## L_LIM

| | | |
|---|---|---|
| 6000 | Null | (*) |
| 1600 | Analog input 1X mon | 12.1 |
| 1650 | Analog input 2X mon | 12.12 |
| 4024 | Fieldbus M->S1 mon | 21.3.3 |
| 4034 | Fieldbus M->S2 mon | 21.3.7 |
| 4044 | Fieldbus M->S3 mon | 21.3.11 |
| 4054 | Fieldbus M->S4 mon | 21.3.15 |
| 4064 | Fieldbus M->S5 mon | 21.3.19 |
| 4074 | Fieldbus M->S6 mon | 21.3.23 |
| 4084 | Fieldbus M->S7 mon | 21.3.27 |
| 4094 | Fieldbus M->S8 mon | 21.3.31 |
| 4104 | Fieldbus M->S9 mon | 21.3.35 |
| 4114 | Fieldbus M->S10 mon | 21.3.39 |
| 4124 | Fieldbus M->S11 mon | 21.3.43 |
| 4134 | Fieldbus M->S12 mon | 21.3.47 |
| 4144 | Fieldbus M->S13 mon | 21.3.51 |
| 4154 | Fieldbus M->S14 mon | 21.3.55 |
| 4164 | Fieldbus M->S15 mon | 21.3.59 |
| 4174 | Fieldbus M->S16 mon | 21.3.63 |
| 3700 | Lift enable | 20.8.1 |
| 3702 | Run cont mon | 20.8.2 |
| 3704 | Up cont mon | 20.8.3 |
| 3706 | Down cont mon | 20.8.4 |
| 3708 | Brake cont mon | 20.8.5 |
| 3710 | Lift dc brake | 20.8.6 |
| 3712 | Brake 2 mon | 20.8.7 |
| 3714 | Door open mon | 20.8.8 |
| 3716 | Lift start | 20.8.9 |
| 3718 | Pad 10 | 20.8.10 |
| 3720 | Lift status word | 20.8.11 |
| 3722 | Pad 12 | 20.8.12 |
| 3724 | Pad 13 | 20.8.13 |
| 3726 | Ramp down limit | 20.8.14 |
| 3728 | PAD 15 | 20.8.15 |
| 3730 | Lift wdec input | 20.8.16 |
| 5008 | Test gen out | 24.1.5 |

## L_MLTREF

| | | |
|---|---|---|
| *XXXX* | (4) | |
| 1600 | Analog input 1X mon | 12.1 |
| 1650 | Analog input 2X mon | 12.12 |
| 2150 | Encoder speed | 15.11 |
| 4024 | Fieldbus M->S1 mon | 21.3.3 |
| 4034 | Fieldbus M->S2 mon | 21.3.7 |
| 4044 | Fieldbus M->S3 mon | 21.3.11 |
| 4054 | Fieldbus M->S4 mon | 21.3.15 |
| 4064 | Fieldbus M->S5 mon | 21.3.19 |
| 4074 | Fieldbus M->S6 mon | 21.3.23 |
| 4084 | Fieldbus M->S7 mon | 21.3.27 |
| 4094 | Fieldbus M->S8 mon | 21.3.31 |
| 4104 | Fieldbus M->S9 mon | 21.3.35 |
| 4114 | Fieldbus M->S10 mon | 21.3.39 |
| 4124 | Fieldbus M->S11 mon | 21.3.43 |
| 4134 | Fieldbus M->S12 mon | 21.3.47 |
| 4144 | Fieldbus M->S13 mon | 21.3.51 |
| 4154 | Fieldbus M->S14 mon | 21.3.55 |
| 4164 | Fieldbus M->S15 mon | 21.3.59 |
| 4174 | Fieldbus M->S16 mon | 21.3.63 |
| 3700 | Lift enable | 20.8.1 |
| 3702 | Run cont mon | 20.8.2 |
| 3704 | Up cont mon | 20.8.3 |
| 3706 | Down cont mon | 20.8.4 |
| 3708 | Brake cont mon | 20.8.5 |
| 3710 | Lift dc brake | 20.8.6 |
| 3712 | Brake 2 mon | 20.8.7 |
| 3714 | Door open mon | 20.8.8 |
| 3716 | Lift start | 20.8.9 |
| 3718 | Pad 10 | 20.8.10 |
| 3720 | Lift status word | 20.8.11 |
| 3722 | Pad 12 | 20.8.12 |
| 3724 | Pad 13 | 20.8.13 |
| 3726 | Ramp down limit | 20.8.14 |
| 3728 | PAD 15 | 20.8.15 |
| 3730 | Lift wdec input | 20.8.16 |
| 5008 | Test gen out | 24.1.5 |

(4) the XXXX parameter changes according to the src parameter used:

610 Ramp ref 1 src
(4) = 600 Dig ramp ref 1 6.1

612 Ramp ref 2 src
(4) = 602 Dig ramp ref 2 6.2

650 Ramp ref 3 src
(4) = 640 Dig ramp ref 3 6.8

652 Ramp ref 4 src
(4) = 642 Dig ramp ref 4 6.9

## L_REF

| | | |
|---|---|---|
| 626 | Ramp ref out mon | (*) |
| 664 | Speed setpoint | 1.5 |
| 262 | Motor speed nofilter | (*) |
| 2150 | Encoder speed | 15.11 |
| 1600 | Analog input 1X mon | 12.1 |
| 1650 | Analog input 2X mon | 12.12 |
| 4024 | Fieldbus M->S1 mon | 21.3.3 |
| 4034 | Fieldbus M->S2 mon | 21.3.7 |
| 4044 | Fieldbus M->S3 mon | 21.3.11 |
| 4054 | Fieldbus M->S4 mon | 21.3.15 |
| 4064 | Fieldbus M->S5 mon | 21.3.19 |
| 4074 | Fieldbus M->S6 mon | 21.3.23 |
| 4084 | Fieldbus M->S7 mon | 21.3.27 |
| 4094 | Fieldbus M->S8 mon | 21.3.31 |
| 4104 | Fieldbus M->S9 mon | 21.3.35 |
| 4114 | Fieldbus M->S10 mon | 21.3.39 |
| 4124 | Fieldbus M->S11 mon | 21.3.43 |
| 4134 | Fieldbus M->S12 mon | 21.3.47 |
| 4144 | Fieldbus M->S13 mon | 21.3.51 |
| 4154 | Fieldbus M->S14 mon | 21.3.55 |
| 4164 | Fieldbus M->S15 mon | 21.3.59 |
| 4174 | Fieldbus M->S16 mon | 21.3.63 |
| 3700 | Lift enable | 20.8.1 |
| 3702 | Run cont mon | 20.8.2 |
| 3704 | Up cont mon | 20.8.3 |
| 3706 | Down cont mon | 20.8.4 |
| 3708 | Brake cont mon | 20.8.5 |
| 3710 | Lift dc brake | 20.8.6 |
| 3712 | Brake 2 mon | 20.8.7 |
| 3714 | Door open mon | 20.8.8 |
| 3716 | Lift start | 20.8.9 |
| 3718 | Pad 10 | 20.8.10 |
| 3720 | Lift status word | 20.8.11 |
| 3722 | Pad 12 | 20.8.12 |
| 3724 | Pad 13 | 20.8.13 |
| 3726 | Ramp down limit | 20.8.14 |
| 3728 | PAD 15 | 20.8.15 |
| 3730 | Lift wdec input | 20.8.16 |
| 5008 | Test gen out | 24.1.5 |

## L_SCOPE

| | | |
|---|---|---|
| 6000 | Null | (*) |

## L_VREF

| | | |
|---|---|---|
| *XXXX* | (5) | |
| 1600 | Analog input 1X mon | 12.1 |
| 1650 | Analog input 2X mon | 12.12 |
| 4024 | Fieldbus M->S1 mon | 21.3.3 |
| 4034 | Fieldbus M->S2 mon | 21.3.7 |
| 4044 | Fieldbus M->S3 mon | 21.3.11 |
| 4054 | Fieldbus M->S4 mon | 21.3.15 |
| 4064 | Fieldbus M->S5 mon | 21.3.19 |
| 4074 | Fieldbus M->S6 mon | 21.3.23 |
| 4084 | Fieldbus M->S7 mon | 21.3.27 |
| 4094 | Fieldbus M->S8 mon | 21.3.31 |
| 4104 | Fieldbus M->S9 mon | 21.3.35 |
| 4114 | Fieldbus M->S10 mon | 21.3.39 |
| 4124 | Fieldbus M->S11 mon | 21.3.43 |
| 4134 | Fieldbus M->S12 mon | 21.3.47 |
| 4144 | Fieldbus M->S13 mon | 21.3.51 |
| 4154 | Fieldbus M->S14 mon | 21.3.55 |
| 4164 | Fieldbus M->S15 mon | 21.3.59 |
| 4174 | Fieldbus M->S16 mon | 21.3.63 |
| 3700 | Lift enable | 20.8.1 |
| 3702 | Run cont mon | 20.8.2 |
| 3704 | Up cont mon | 20.8.3 |
| 3706 | Down cont mon | 20.8.4 |
| 3708 | Brake cont mon | 20.8.5 |
| 3710 | Lift dc brake | 20.8.6 |
| 3712 | Brake 2 mon | 20.8.7 |
| 3714 | Door open mon | 20.8.8 |
| 3716 | Lift start | 20.8.9 |
| 3718 | Pad 10 | 20.8.10 |
| 3720 | Lift status word | 20.8.11 |
| 3722 | Pad 12 | 20.8.12 |
| 3724 | Pad 13 | 20.8.13 |
| 3726 | Ramp down limit | 20.8.14 |
| 3728 | PAD 15 | 20.8.15 |
| 3730 | Lift wdec input | 20.8.16 |
| 6000 | Null | (*) |
| 5008 | Test gen out | 24.1.5 |

(5) the XXXX parameter changes according to the src parameter used:

2382 Torque ref 1 src
(5) = 2380 Dig torque ref 1 18.7

2492 Vf scale src
(5) = 2490 Dig Vf scale 19.22

## L_WDECOMP

| PAR | Description | Menu | PAR | Description | Menu | PAR | Description | Menu |
|---|---|---|---|---|---|---|---|---|
| *XXXX* | *(6)* | | | | | | | |
| 6000 | Null | (*) | | | | | | |
| 6002 | One | (*) | | | | | | |
| 4432 | Word comp mon | 21.5.17 | | | | | | |
| 4024 | Fieldbus M->S1 mon | 21.3.3 | | | | | | |
| 4034 | Fieldbus M->S2 mon | 21.3.7 | | | | | | |
| 4044 | Fieldbus M->S3 mon | 21.3.11 | | | | | | |
| 4054 | Fieldbus M->S4 mon | 21.3.15 | | | | | | |
| 4064 | Fieldbus M->S5 mon | 21.3.19 | | | | | | |
| 4074 | Fieldbus M->S6 mon | 21.3.23 | | | | | | |
| 4084 | Fieldbus M->S7 mon | 21.3.27 | | | | | | |
| 4094 | Fieldbus M->S8 mon | 21.3.31 | | | | | | |
| 4104 | Fieldbus M->S9 mon | 21.3.35 | | | | | | |
| 4114 | Fieldbus M->S10 mon | 21.3.39 | | | | | | |
| 4124 | Fieldbus M->S11 mon | 21.3.43 | | | | | | |
| 4134 | Fieldbus M->S12 mon | 21.3.47 | | | | | | |
| 4144 | Fieldbus M->S13 mon | 21.3.51 | | | | | | |
| 4154 | Fieldbus M->S14 mon | 21.3.55 | | | | | | |
| 4164 | Fieldbus M->S15 mon | 21.3.59 | | | | | | |
| 4174 | Fieldbus M->S16 mon | 21.3.63 | | | | | | |
| 3700 | Lift enable | 20.8.1 | | | | | | |
| 3702 | Run cont mon | 20.8.2 | | | | | | |
| 3704 | Up cont mon | 20.8.3 | | | | | | |
| 3706 | Down cont mon | 20.8.4 | | | | | | |
| 3708 | Brake cont mon | 20.8.5 | | | | | | |
| 3710 | Lift dc brake | 20.8.6 | | | | | | |
| 3712 | Brake 2 mon | 20.8.7 | | | | | | |
| 3714 | Door open mon | 20.8.8 | | | | | | |
| 3716 | Lift start | 20.8.9 | | | | | | |
| 3718 | Pad 10 | 20.8.10 | | | | | | |
| 3720 | Lift status word | 20.8.11 | | | | | | |
| 3722 | Pad 12 | 20.8.12 | | | | | | |
| 3724 | Pad 13 | 20.8.13 | | | | | | |
| 3726 | Ramp down limit | 20.8.14 | | | | | | |
| 3728 | PAD 15 | 20.8.15 | | | | | | |
| 3730 | Lift wdec input | 20.8.16 | | | | | | |

(6) the XXXX parameter changes according to the src parameter use:

4452 Word decomp src (6) = 4450 Dig word decomp 21.6.1

(*) Parameter not shown on the keypad. For information see the "PARAMETERS INCLUDED IN SELECTION LISTS BUT NOT SHOWN ON THE KEYPAD" section.

## System diagram index

| | | | |
|---|---|---|---|
| DRIVE OVERVIEW | DrvOverview | EncoderConf | ENCODER CONFIG |
| LIFT | Lift | SpeedRegGains | SPEED REG GAINS |
| DIGITAL INPUTS | DigInps | TorqueConf | TORQUE CONFIG |
| DIGITAL OUTPUTS | DigOuts | VFParameters | VF PARAMETERS |
| ANALOG INPUTS | AnalInps | Functions | FUNCTIONS |
| ANALOG OUTPUTS | AnalOuts | | |

## Drive overview (DrvOverview)

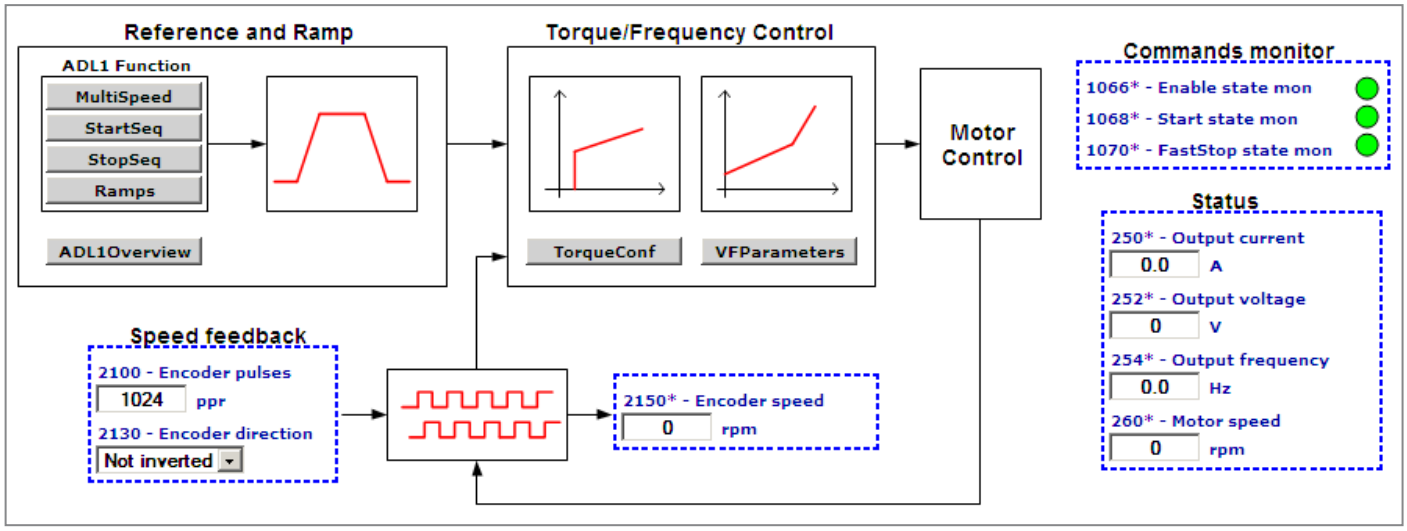

# ADL1 application index (ADL1FuncIndex)

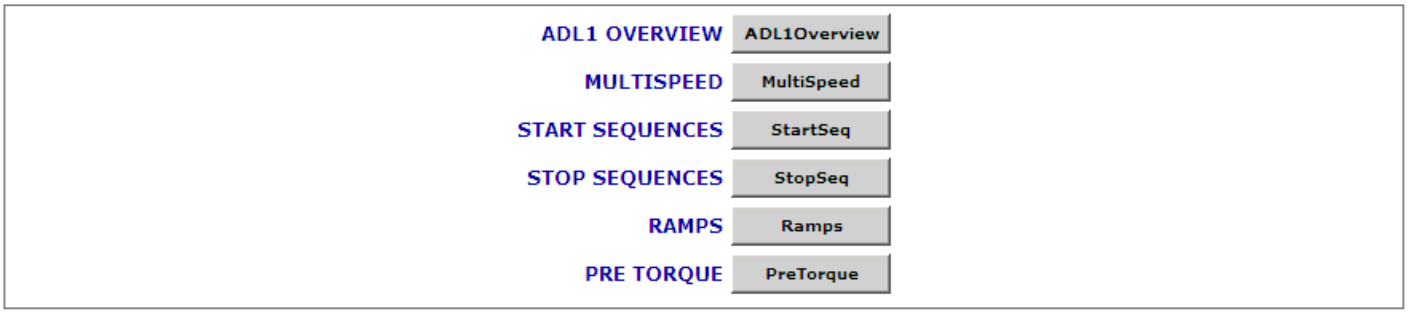


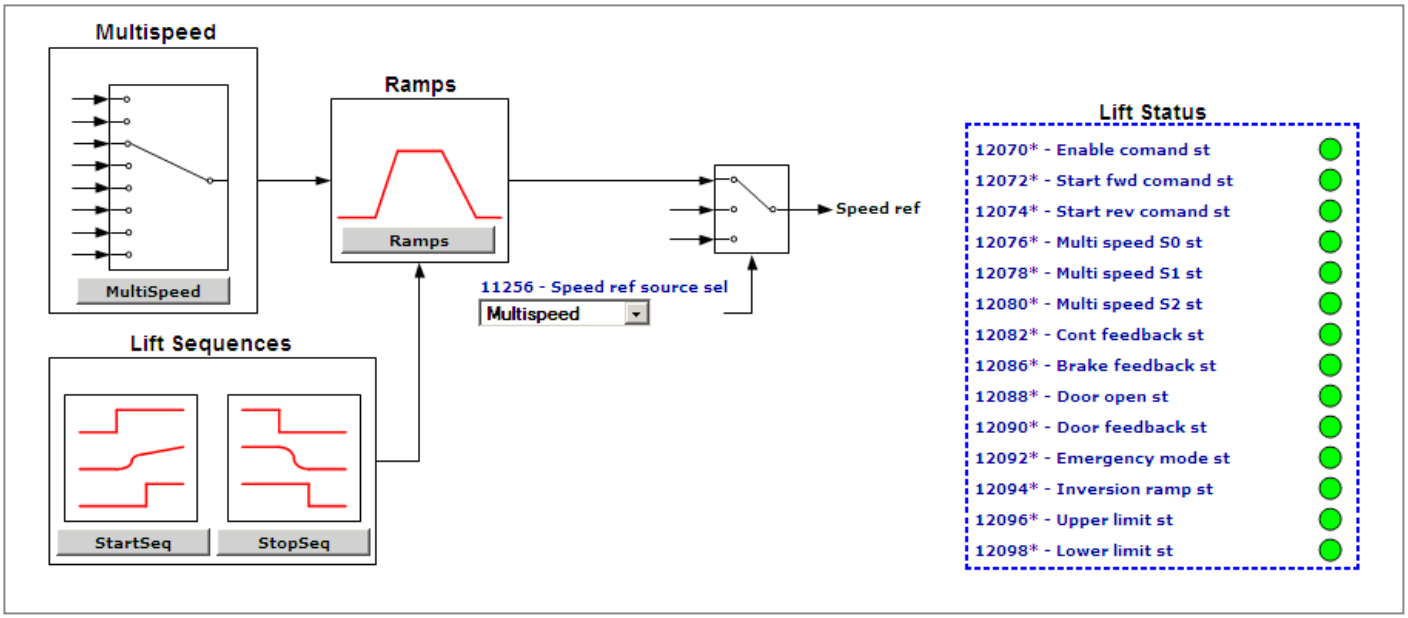


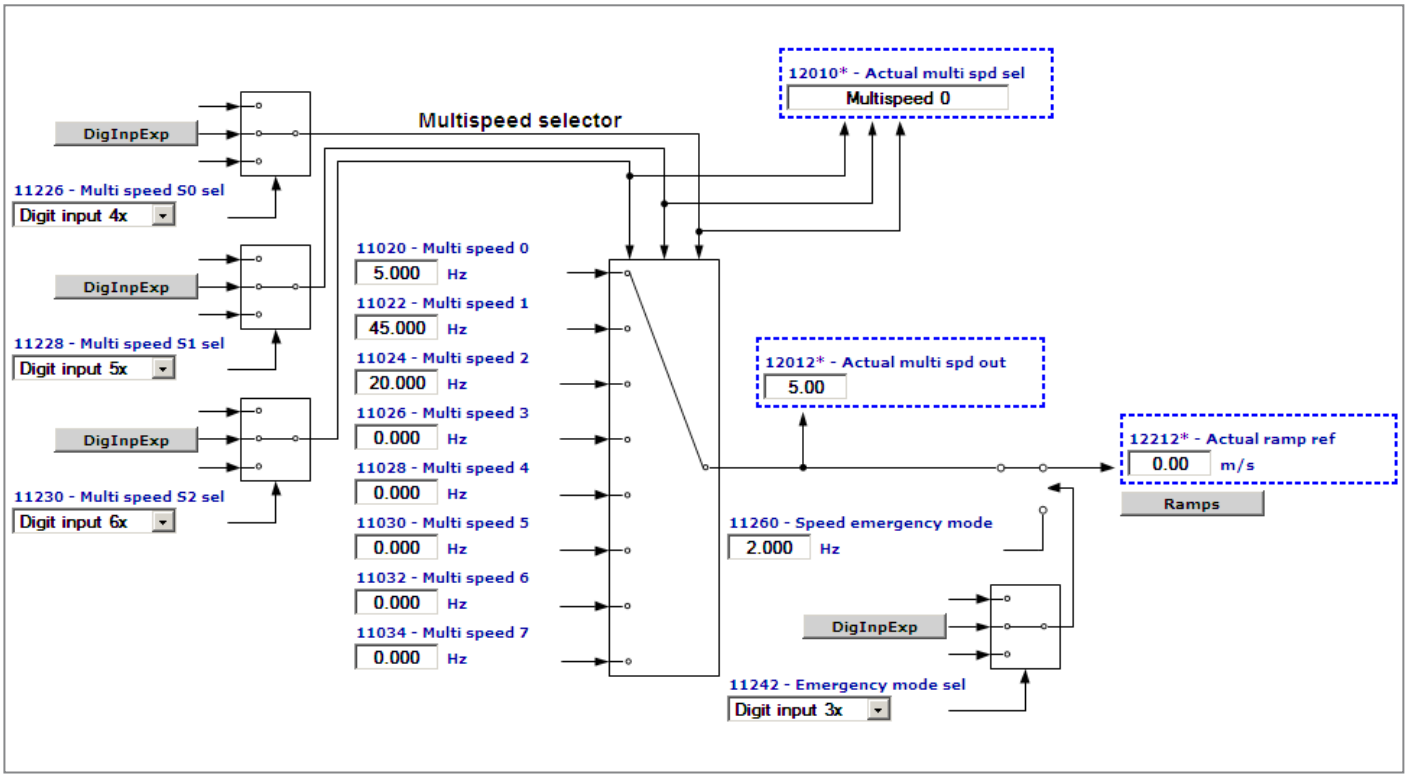

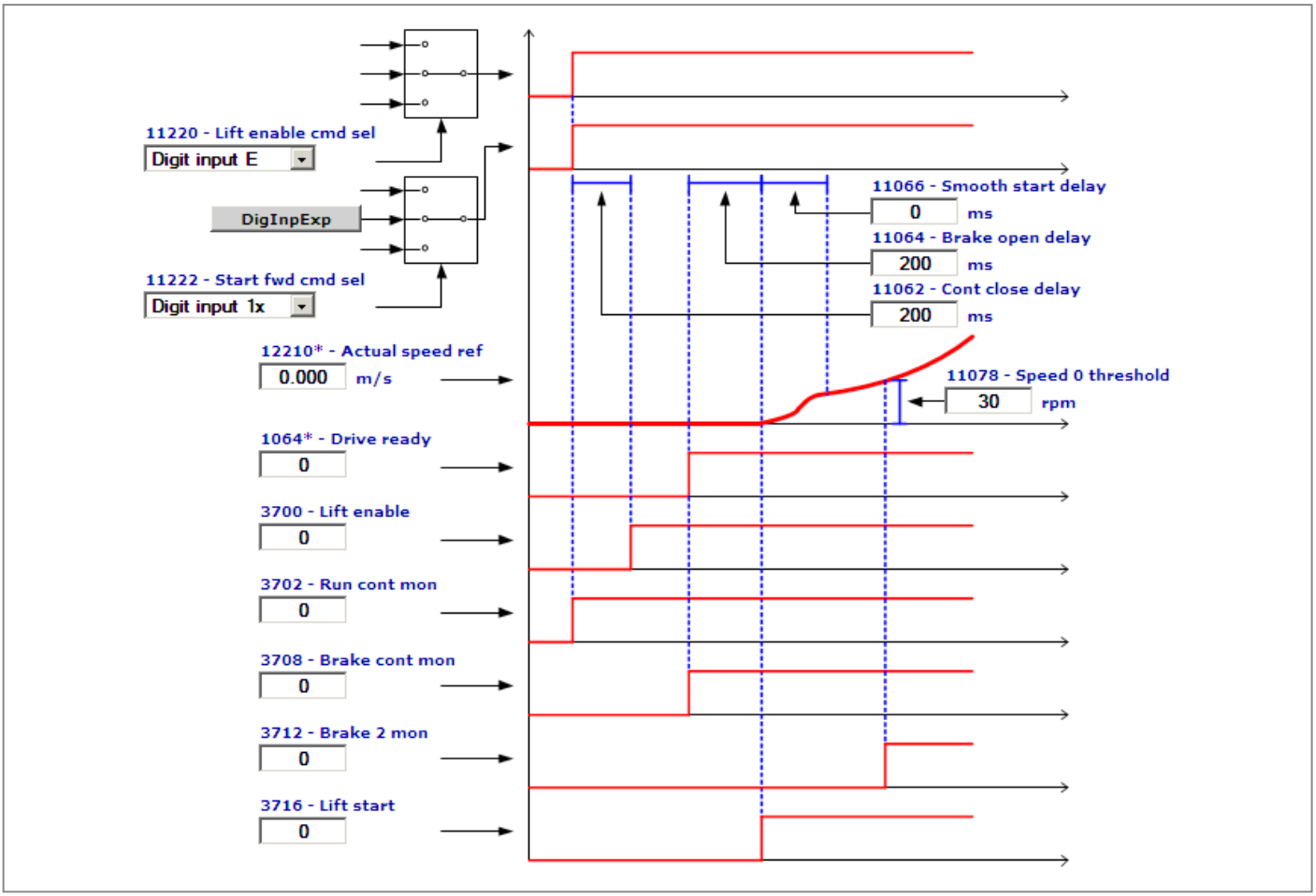
11220 - Lift enable cmd sel
Digit input E
DigInpExp
11222 - Start fwd cmd sel
Digit input 1x
12210* - Actual speed ref
0.000 m/s
1064* - Drive ready
0
3700 - Lift enable
0
3702 - Run cont mon
0
3708 - Brake cont mon
0
3712 - Brake 2 mon
0
3716 - Lift start
0
11066 - Smooth start delay
0 ms
11064 - Brake open delay
200 ms
11062 - Cont close delay
200 ms
11078 - Speed 0 threshold
30 rpm

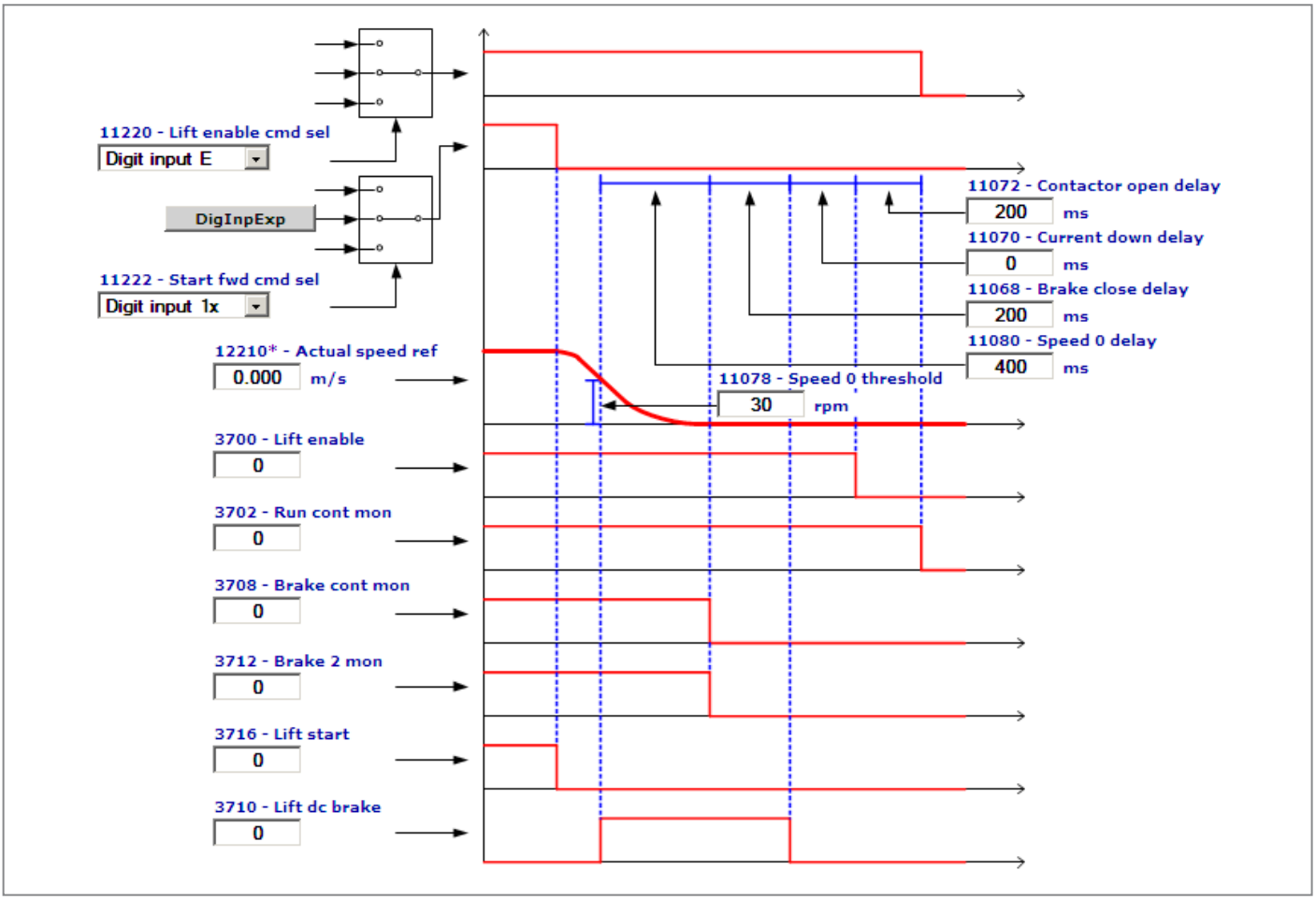
11220 - Lift enable cmd sel
Digit input E
DigInpExp
11222 - Start fwd cmd sel
Digit input 1x
12210* - Actual speed ref
0.000 m/s
3700 - Lift enable
0
3702 - Run cont mon
0
3708 - Brake cont mon
0
3712 - Brake 2 mon
0
3716 - Lift start
0
3710 - Lift dc brake
0
11072 - Contactor open delay
200 ms
11070 - Current down delay
0 ms
11068 - Brake close delay
200 ms
11080 - Speed 0 delay
400 ms
11078 - Speed 0 threshold
30 rpm

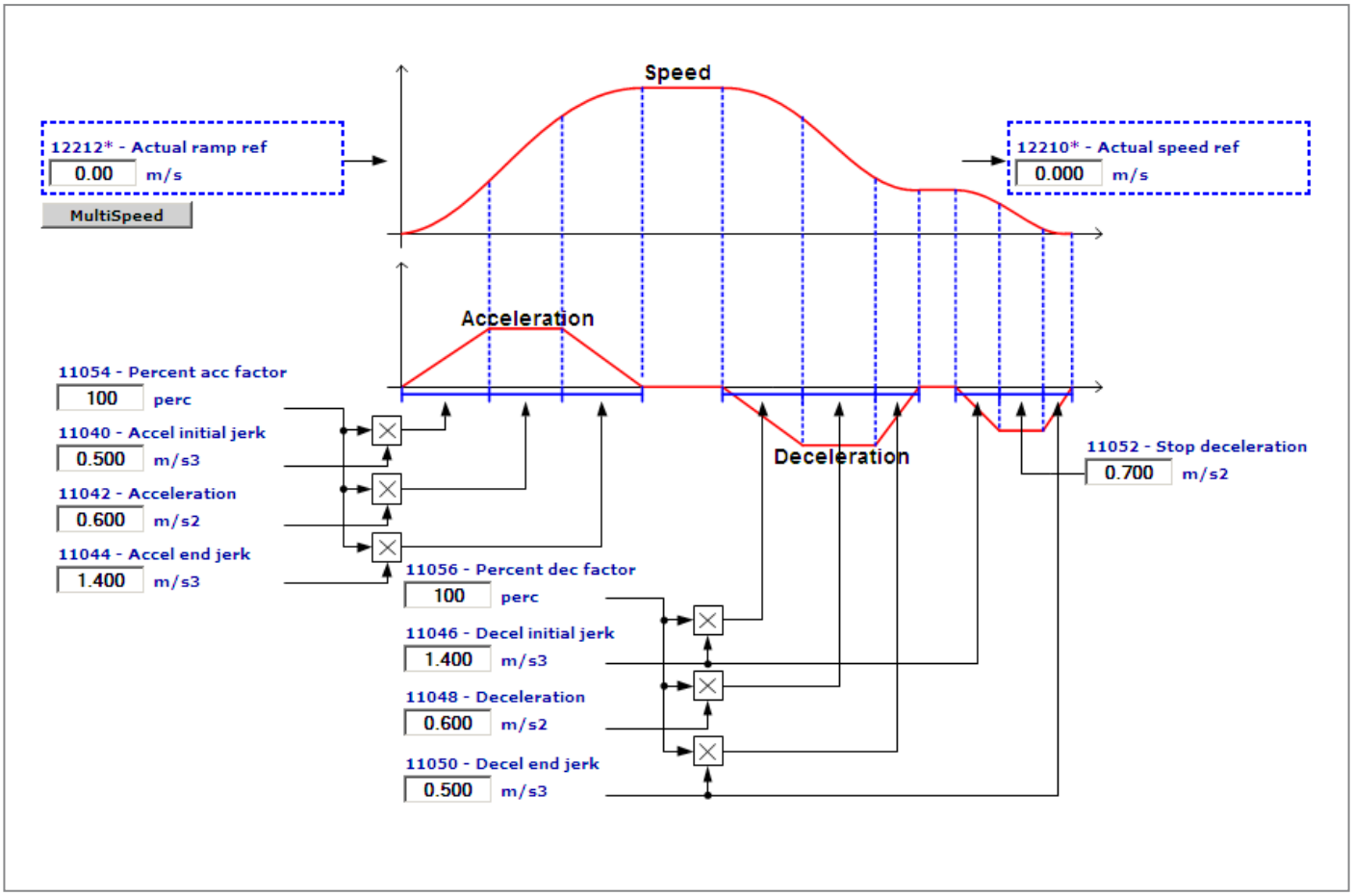
Speed
12212* - Actual ramp ref
0.00 m/s
MultiSpeed
12210* - Actual speed ref
0.000 m/s
Acceleration
Deceleration
11054 - Percent acc factor
100 perc
11040 - Accel initial jerk
0.500 m/s3
11042 - Acceleration
0.600 m/s2
11044 - Accel end jerk
1.400 m/s3
11056 - Percent dec factor
100 perc
11046 - Decel initial jerk
1.400 m/s3
11048 - Deceleration
0.600 m/s2
11050 - Decel end jerk
0.500 m/s3
11052 - Stop deceleration
0.700 m/s2

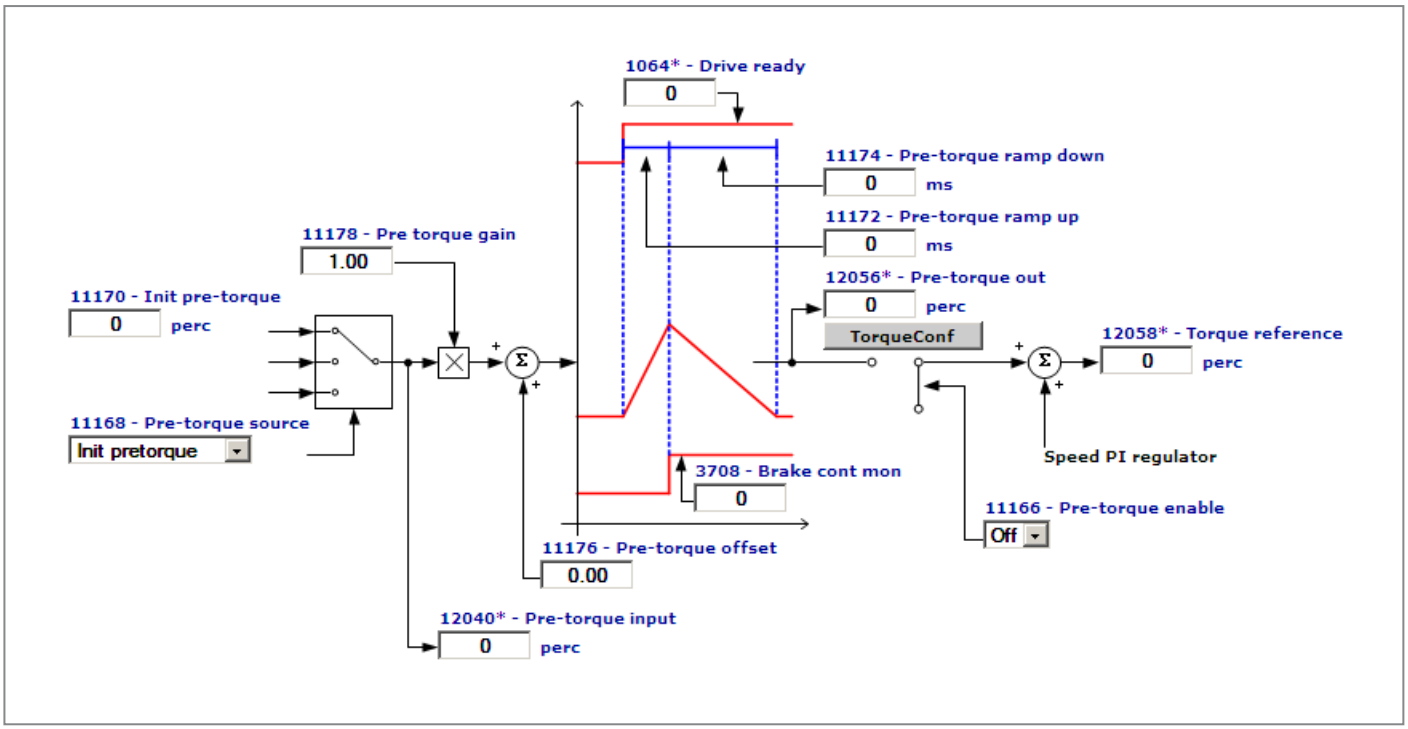
1064* - Drive ready
0
11174 - Pre-torque ramp down
0 ms
11172 - Pre-torque ramp up
0 ms
11178 - Pre torque gain
1.00
11170 - Init pre-torque
0 perc
12056* - Pre-torque out
0 perc
TorqueConf
12058* - Torque reference
0 perc
11168 - Pre-torque source
Init pretorque
Speed PI regulator
3708 - Brake cont mon
0
11166 - Pre-torque enable
Off
11176 - Pre-torque offset
0.00
12040* - Pre-torque input
0 perc

# Expansion card digital inputs (DigImpExp)

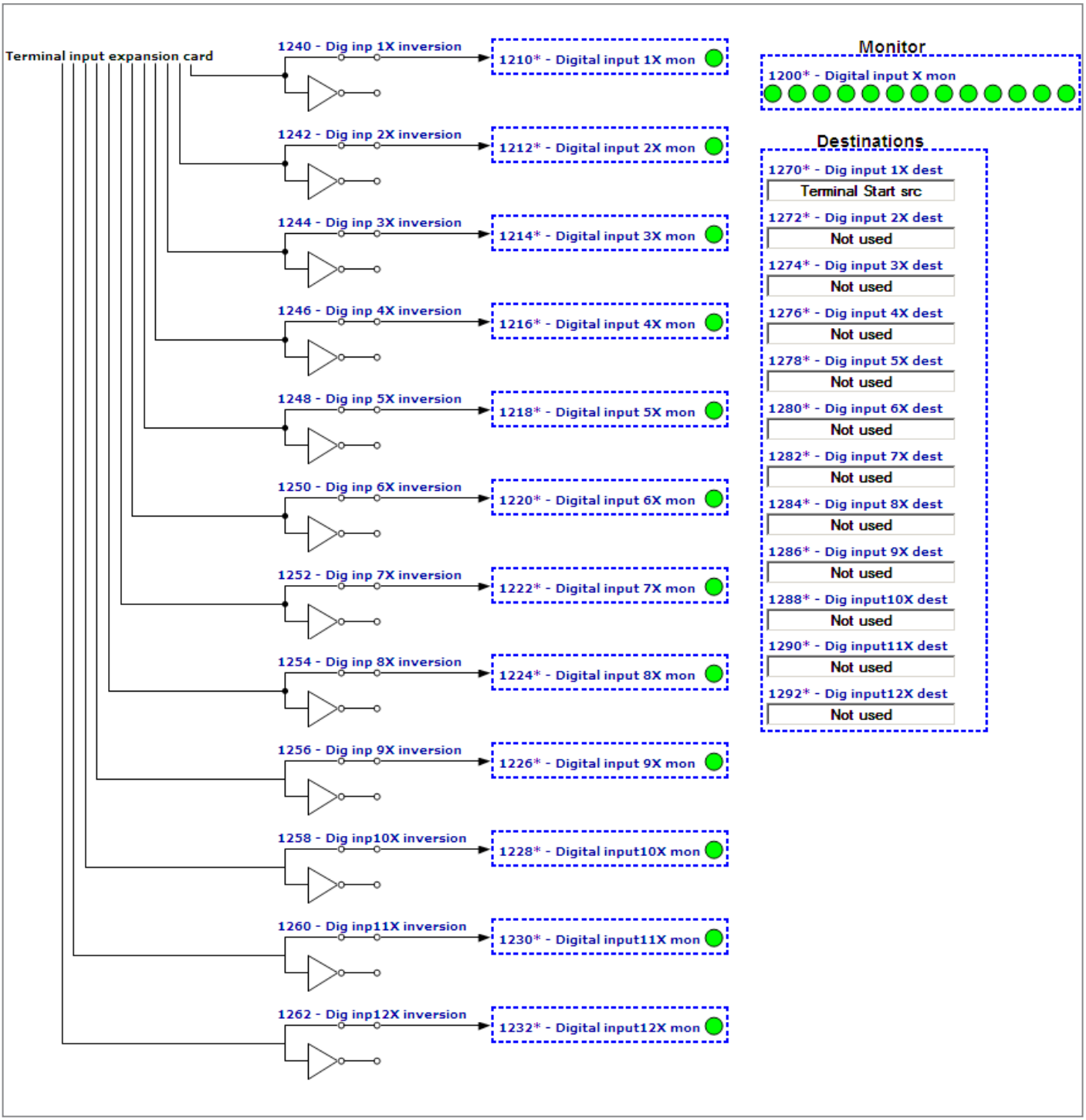

## Expansion card digital outputs (DigOutExp)

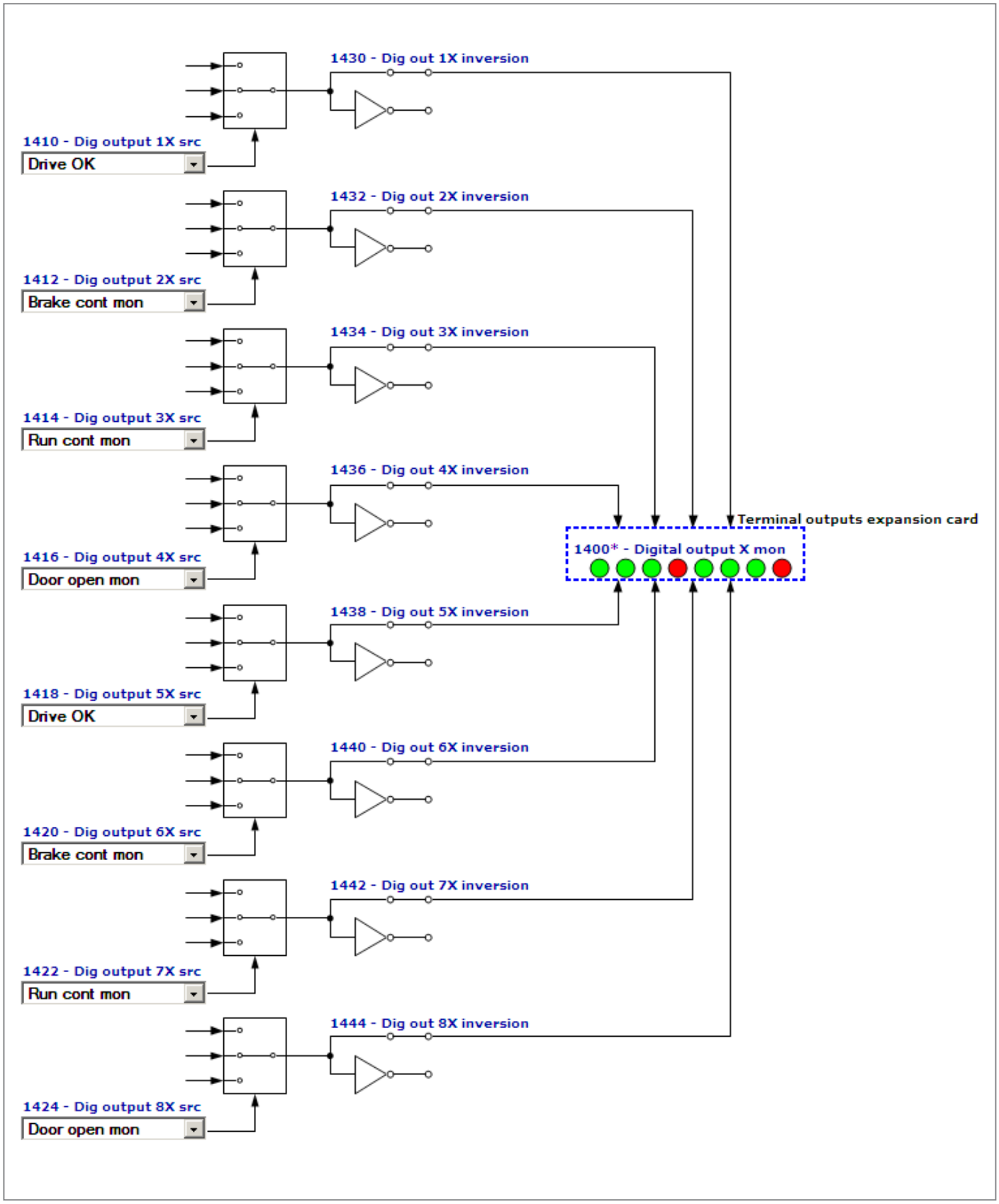

# Analog inputs

ANALOG INPUT 1 EXPANSION CARD AnInp1Exp

ANALOG INPUT 2 EXPANSION CARD AnInp2Exp

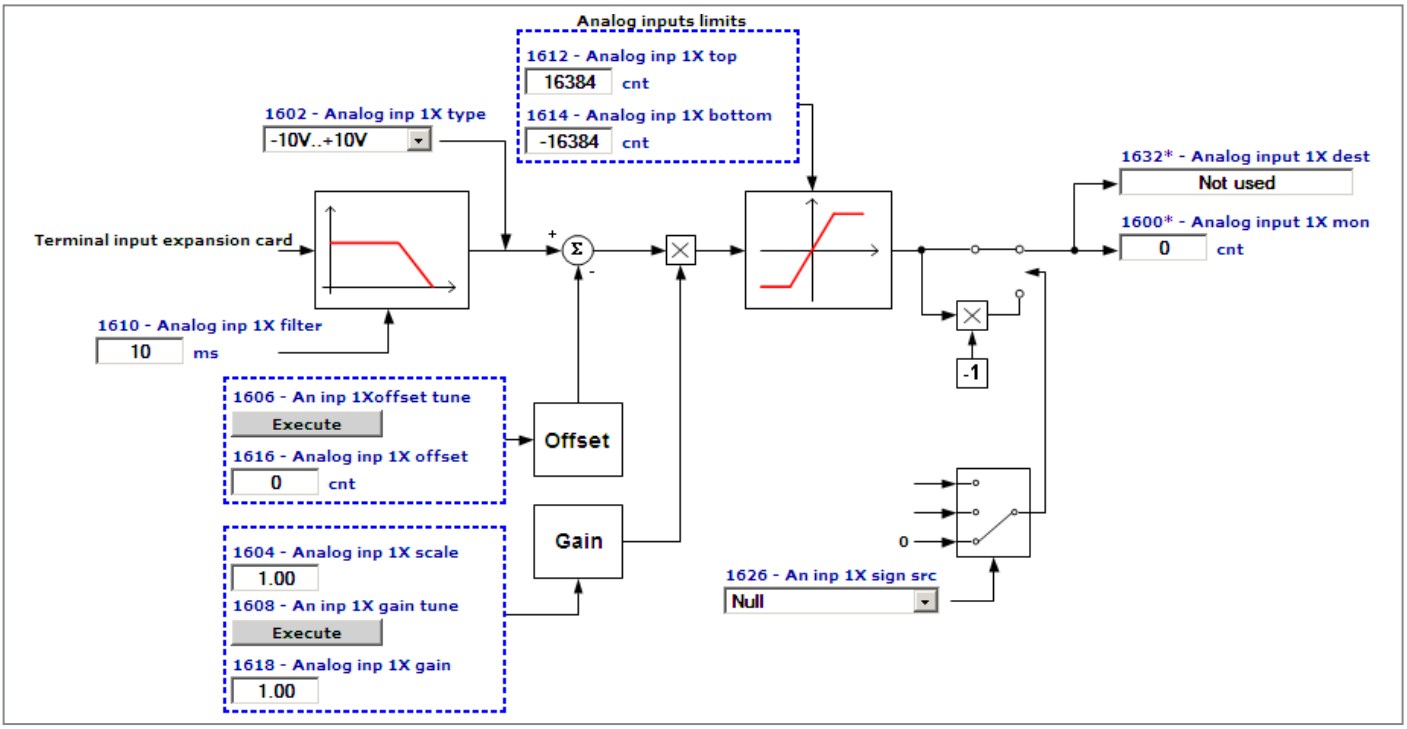


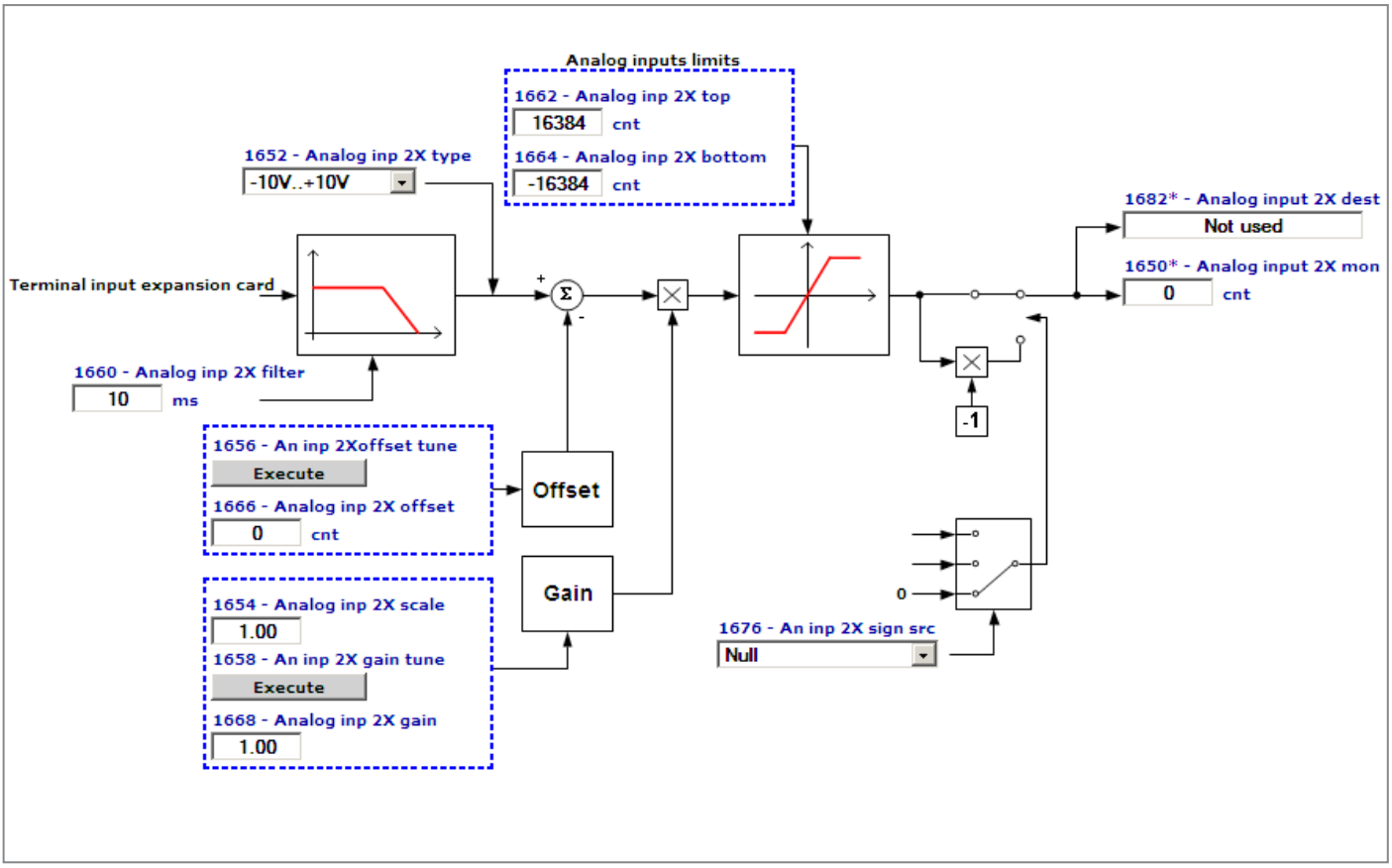

# Analog outputs

ANALOG OUTPUT 1 EXPANSION CARD AnOut1Exp

ANALOG OUTPUT 2 EXPANSION CARD AnOut2Exp

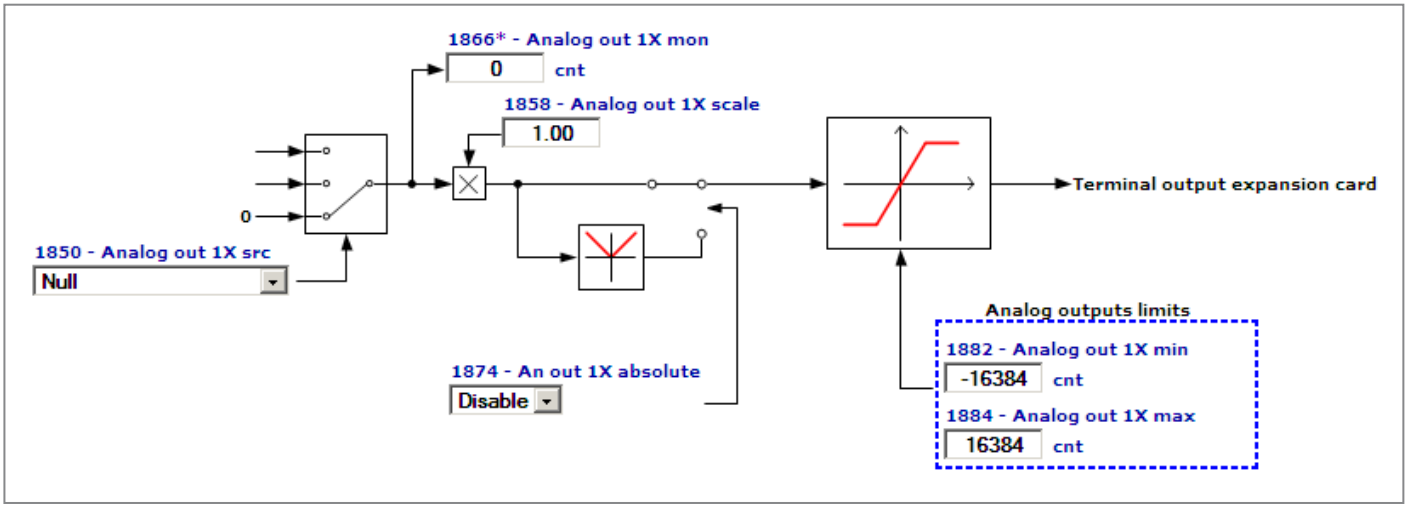


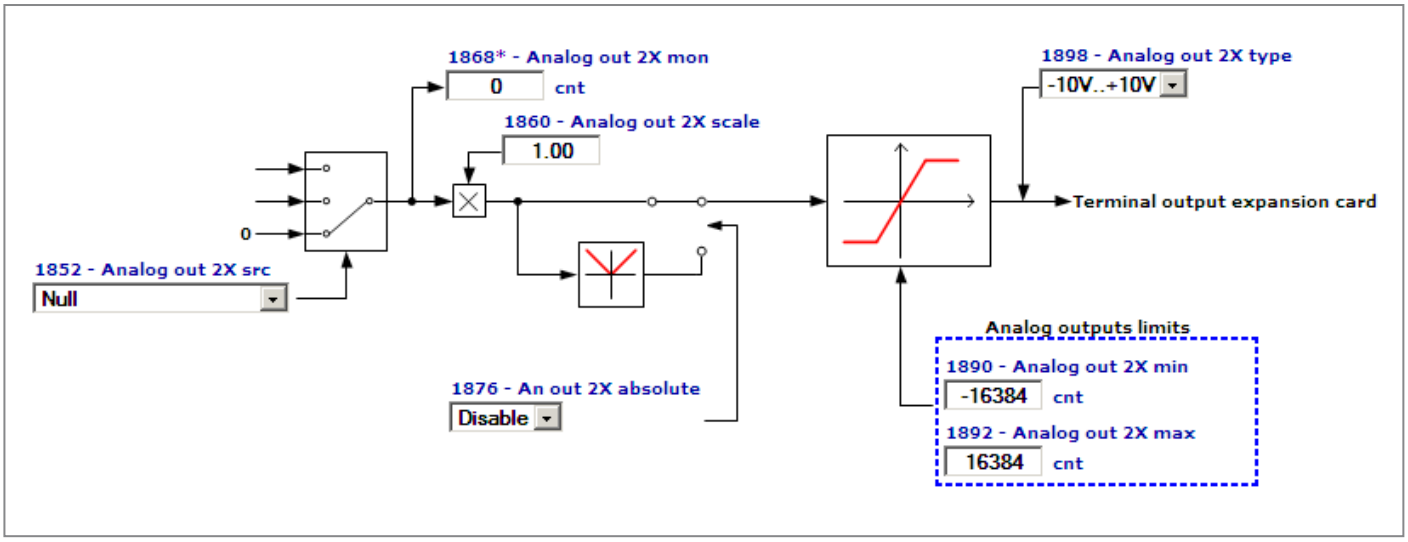

# Encoder config

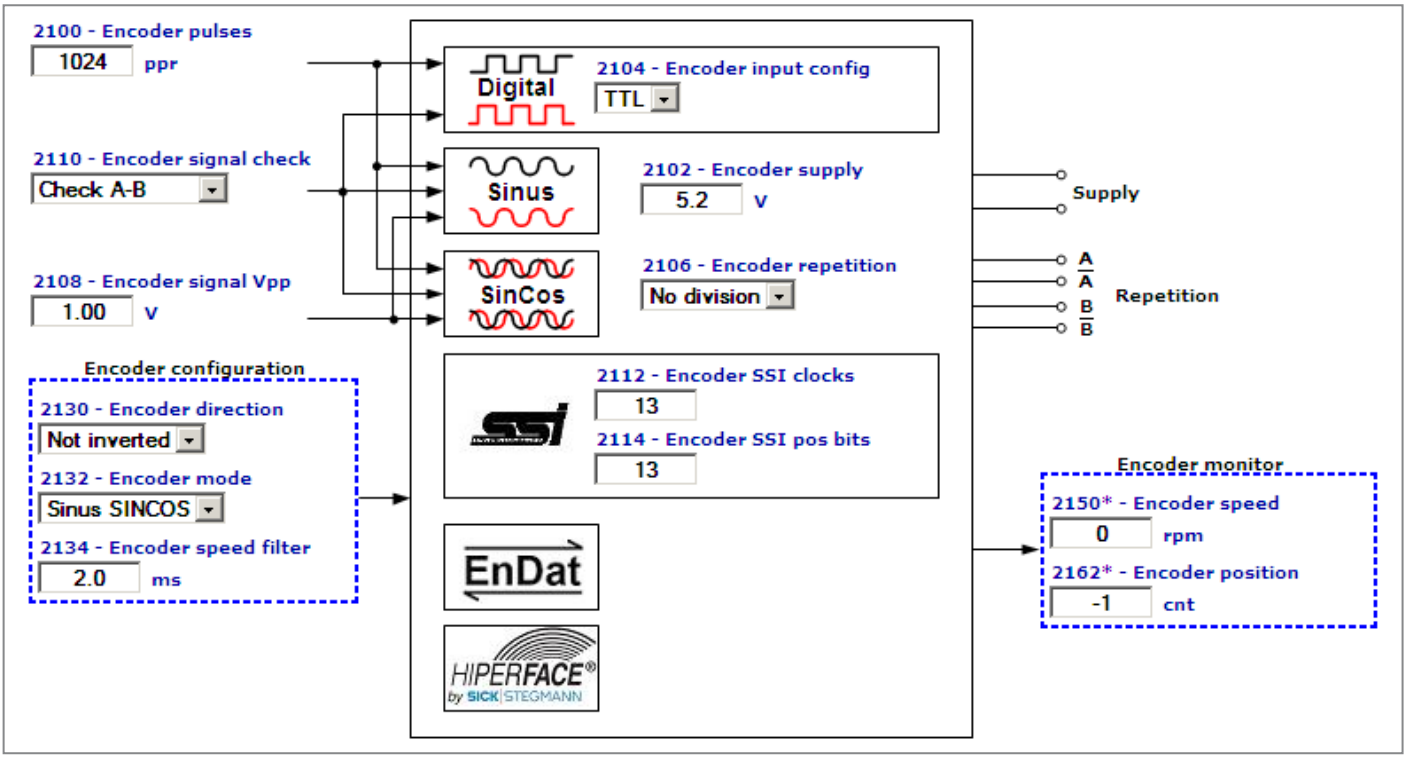

# SLS control (ControlVf)

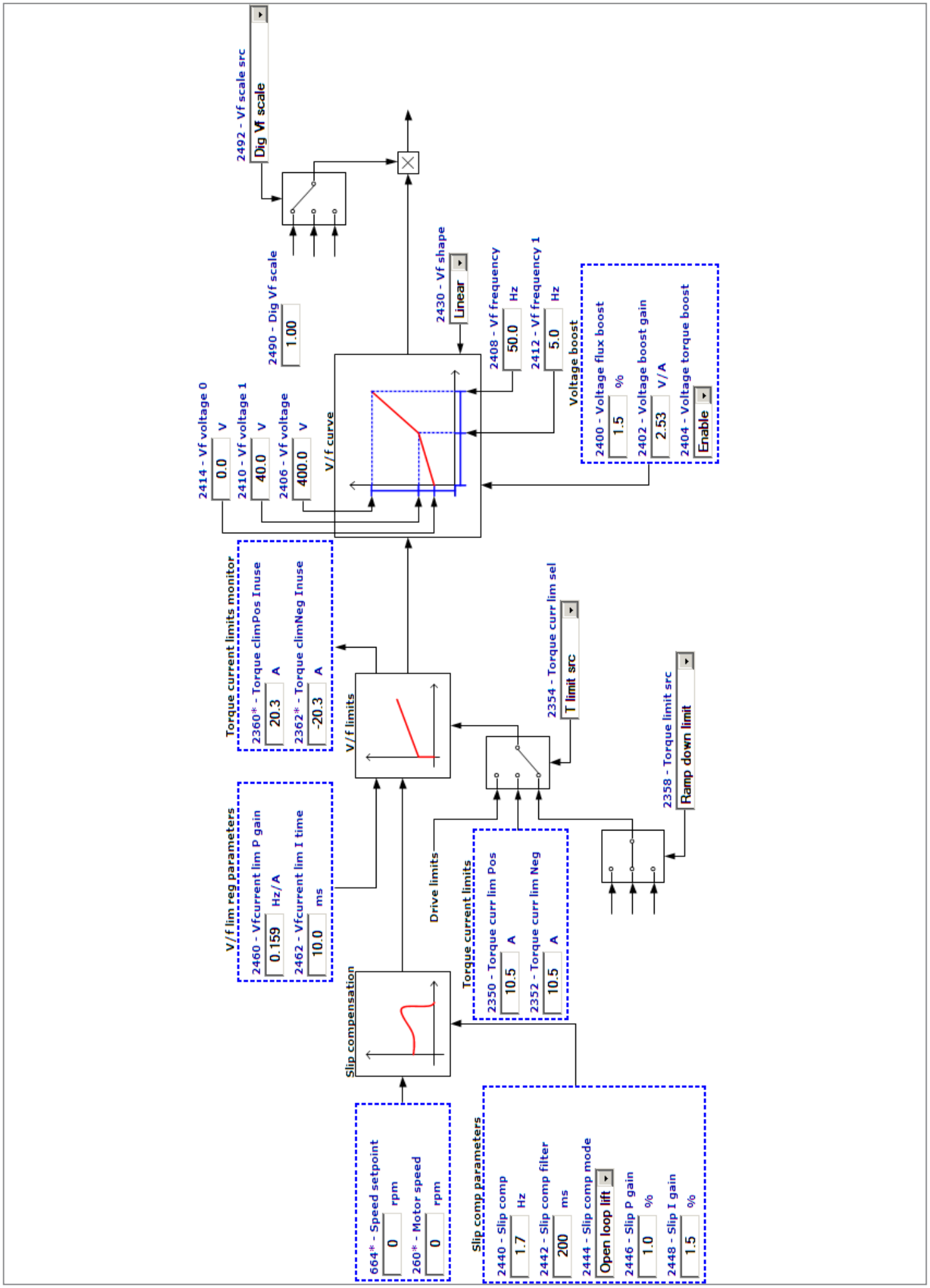

# Functions

| | |
|---|---|
| INERTIA COMP | InertiaComp |
| DC BRAKING | DCBraking |
| MOTOR OVERLOAD | MotOvld |
| BRES OVERLOAD | BresOvld |
| DOUBLE PAR SET | DoubleParSet |
| COMPARE | Compare |

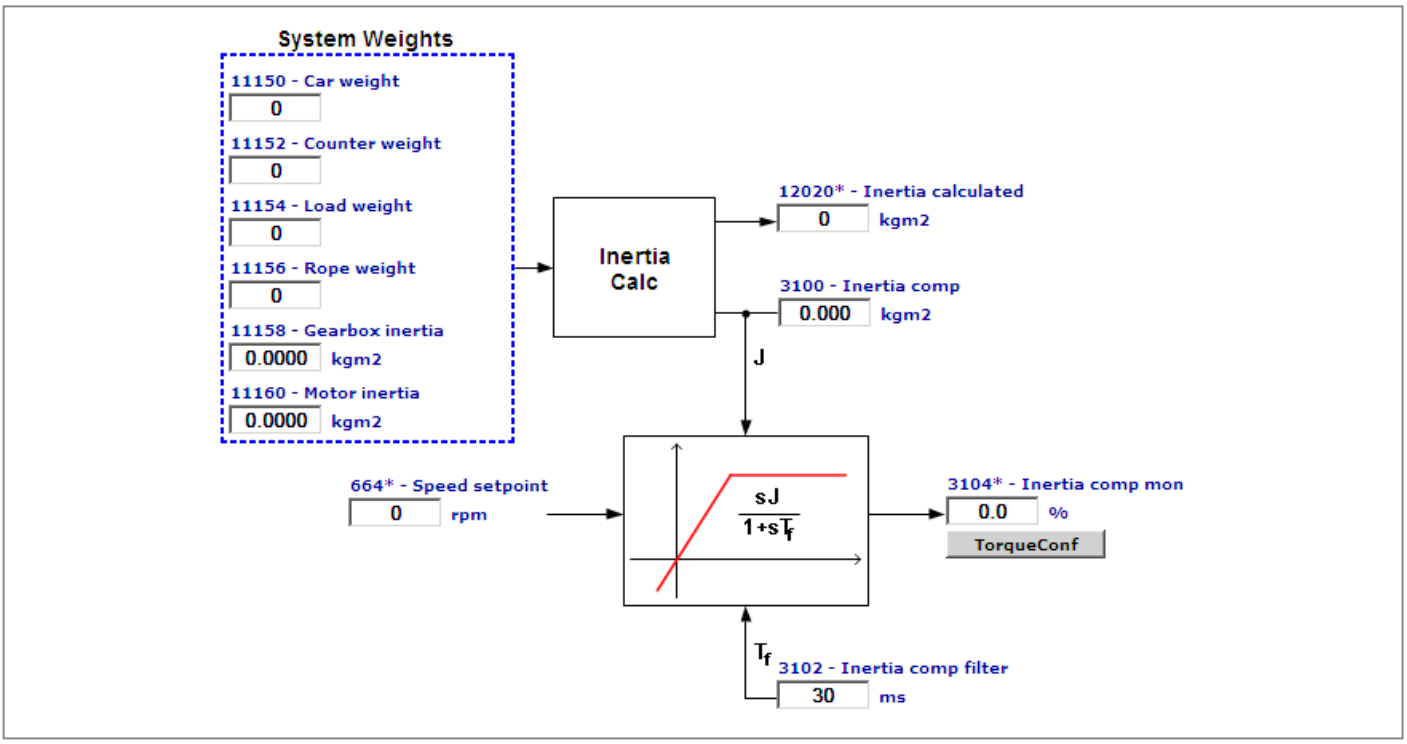


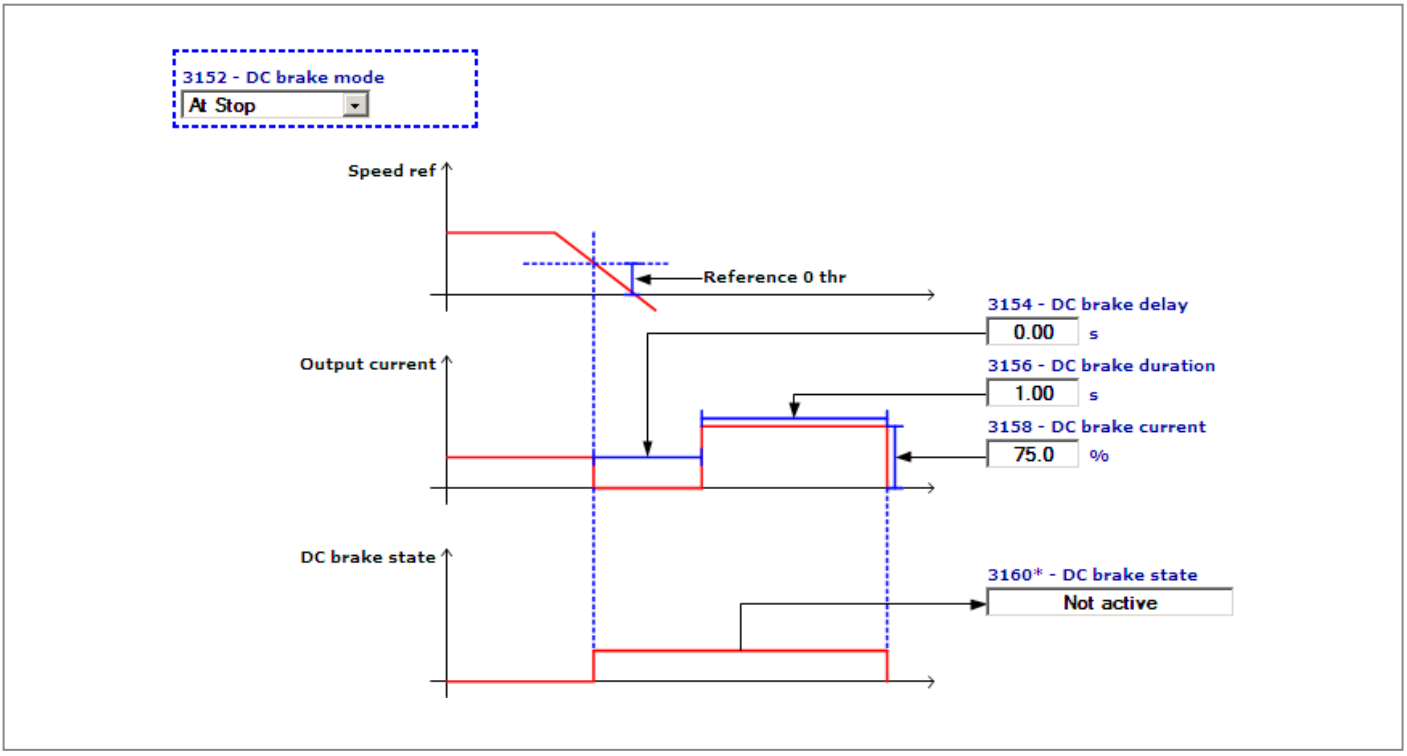

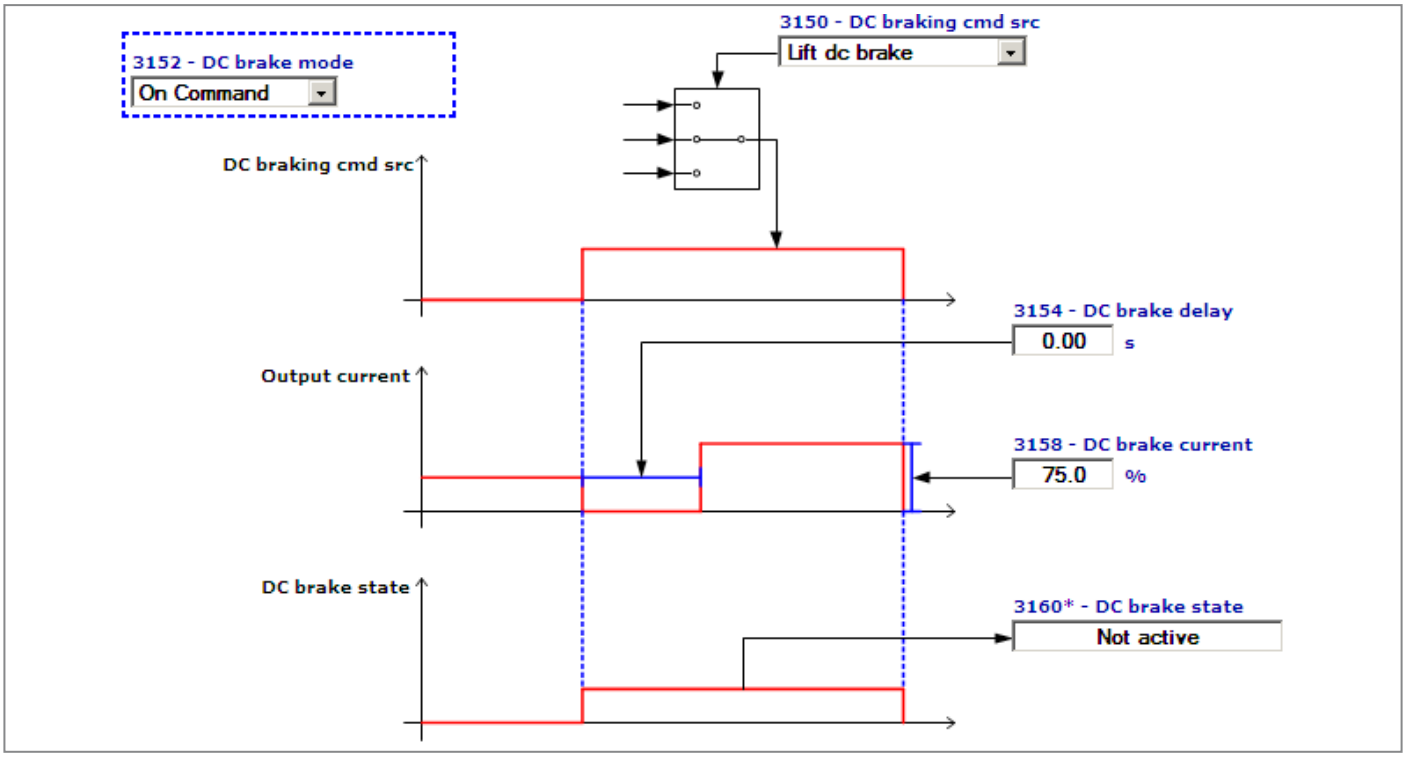
3152 - DC brake mode
On Command
3150 - DC braking cmd src
Lift dc brake
DC braking cmd src
3154 - DC brake delay
0.00
s
Output current
3158 - DC brake current
75.0
%
DC brake state
3160* - DC brake state
Not active

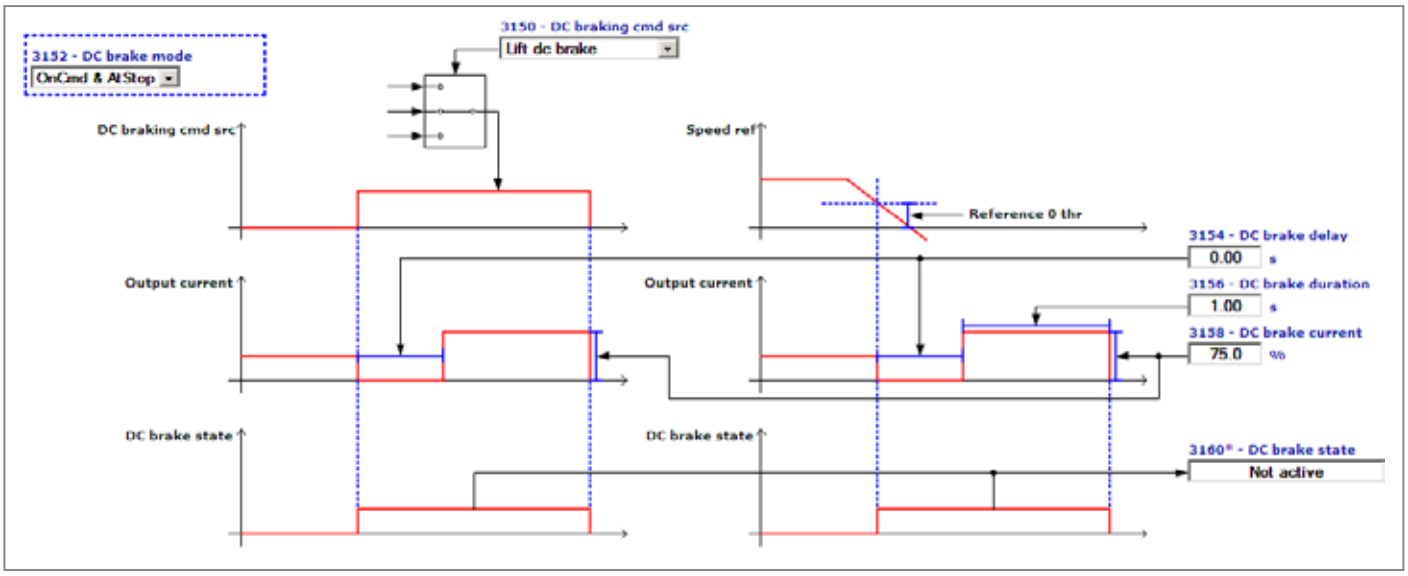
3152 - DC brake mode
OnCmd & AtStop
3150 - DC braking cmd src
Lift dc brake
DC braking cmd src
Speed ref
Reference 0 thr
3154 - DC brake delay
0.00
s
Output current
Output current
3156 - DC brake duration
1.00
s
3158 - DC brake current
75.0
%
DC brake state
DC brake state
3160* - DC brake state
Not active

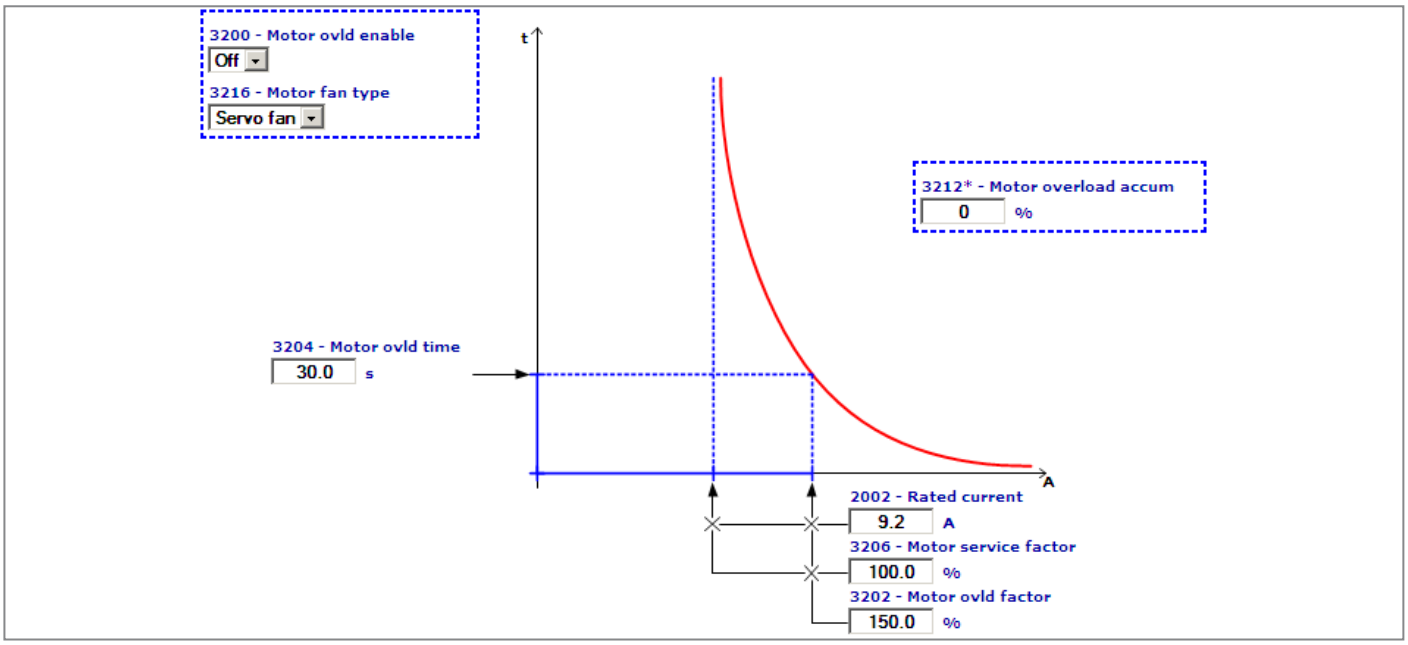
3200 - Motor ovld enable
Off
3216 - Motor fan type
Servo fan
t
3212* - Motor overload accum
0
%
3204 - Motor ovld time
30.0
s
A
2002 - Rated current
9.2
A
3206 - Motor service factor
100.0
%
3202 - Motor ovld factor
150.0
%

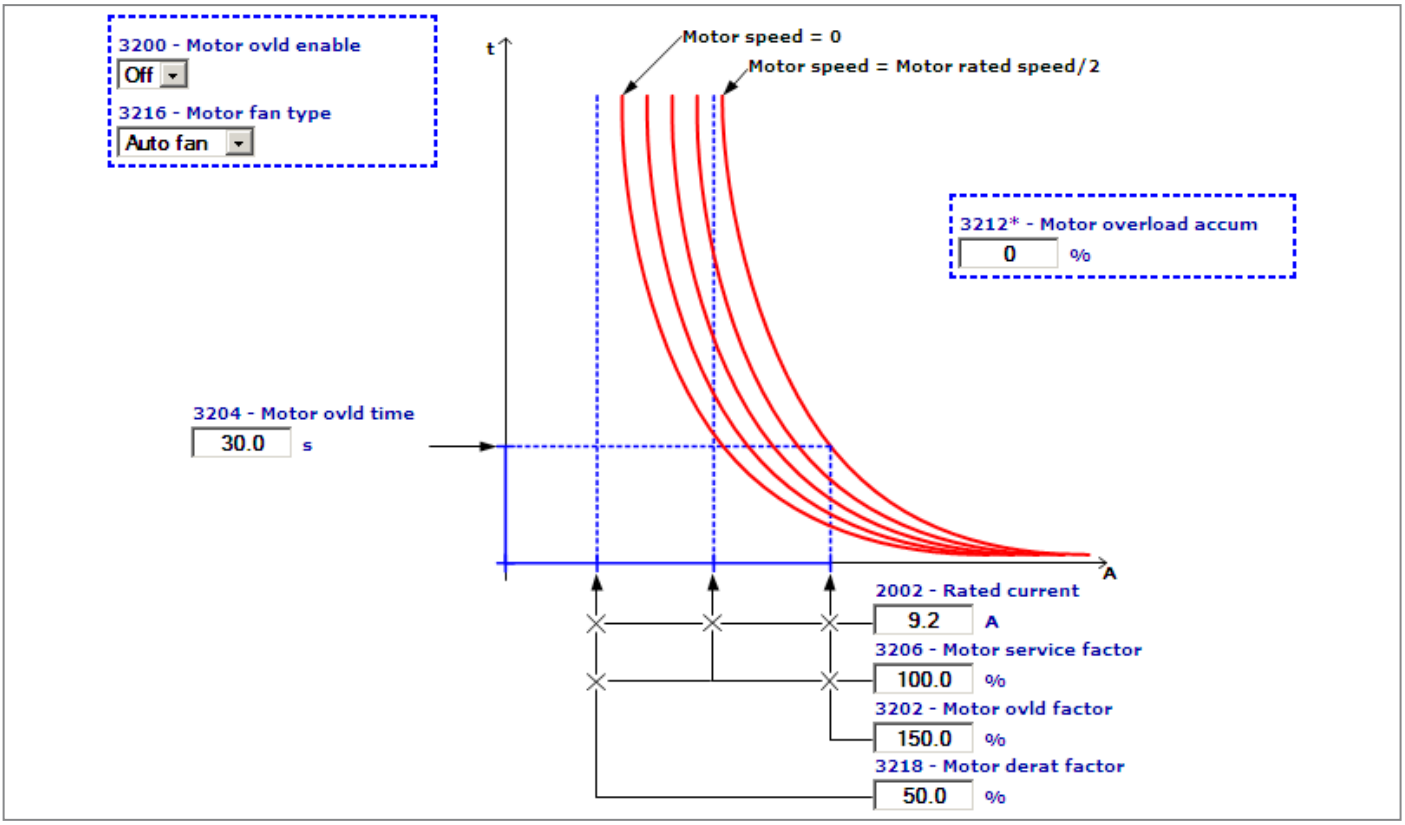
3200 - Motor ovld enable
Off
3216 - Motor fan type
Auto fan
t
Motor speed = 0
Motor speed = Motor rated speed/2
3212* - Motor overload accum
0
%
3204 - Motor ovld time
30.0
s
A
2002 - Rated current
9.2
A
3206 - Motor service factor
100.0
%
3202 - Motor ovld factor
150.0
%
3218 - Motor derat factor
50.0
%

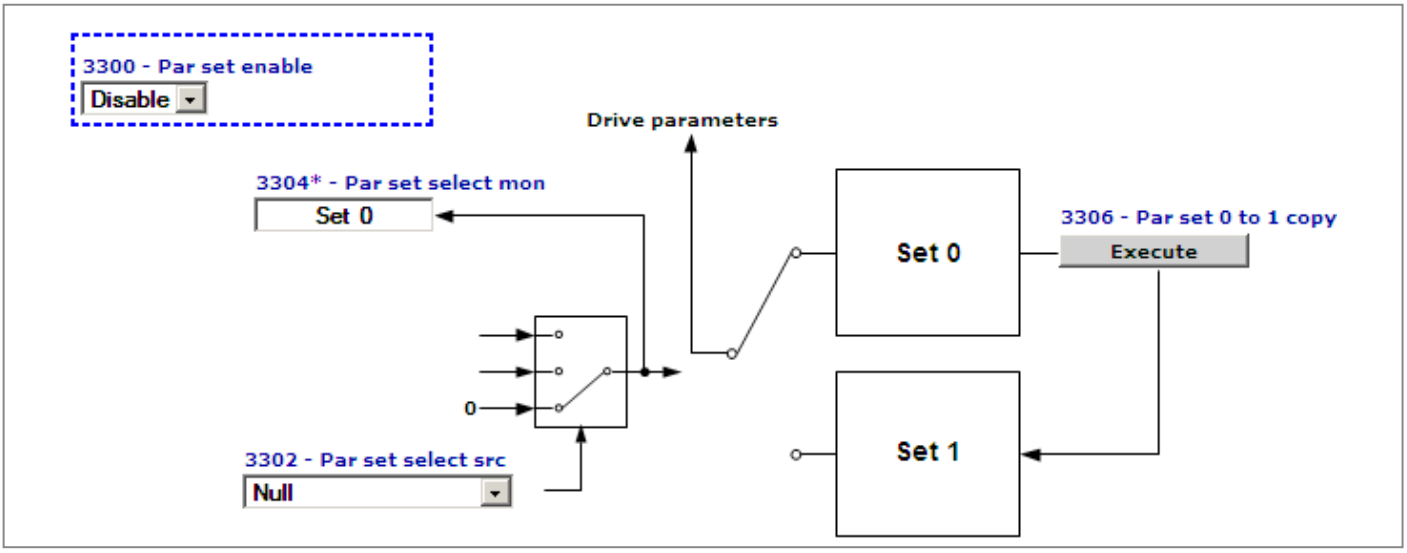
3300 - Par set enable
Disable
Drive parameters
3304* - Par set select mon
Set 0
Set 0
3306 - Par set 0 to 1 copy
Execute
0
Set 1
3302 - Par set select src
Null

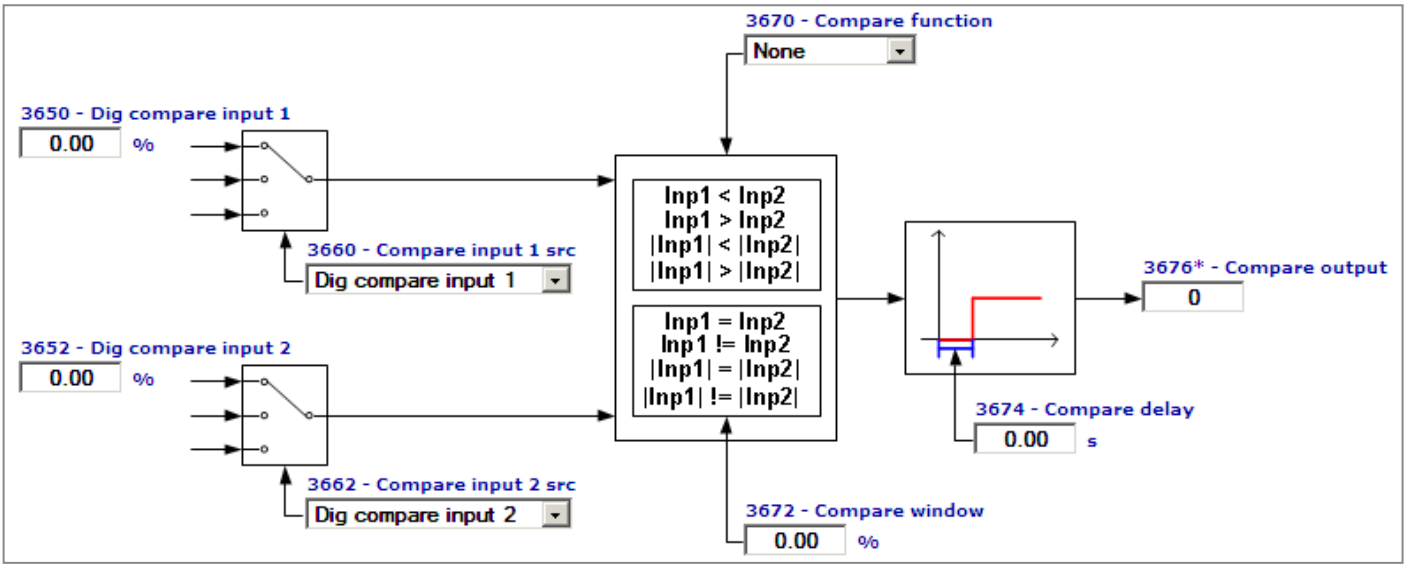
3670 - Compare function
None
3650 - Dig compare input 1
0.00
%
Inp1 < Inp2
Inp1 > Inp2
|Inp1| < |Inp2|
|Inp1| > |Inp2|
3660 - Compare input 1 src
Dig compare input 1
3676* - Compare output
0
Inp1 = Inp2
Inp1 != Inp2
|Inp1| = |Inp2|
|Inp1| != |Inp2|
3652 - Dig compare input 2
0.00
%
3674 - Compare delay
0.00
s
3662 - Compare input 2 src
Dig compare input 2
3672 - Compare window
0.00
%

## Torque control (TorqueCtrl)

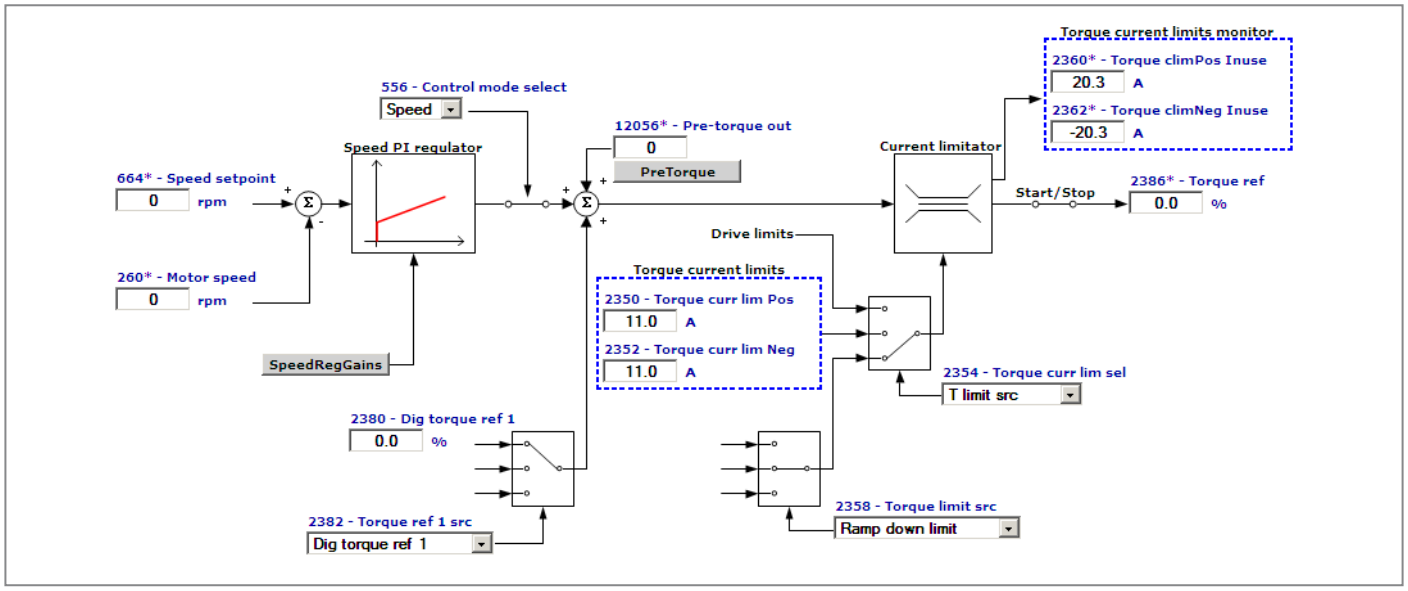


## Gains adaptive (GainAdapt)

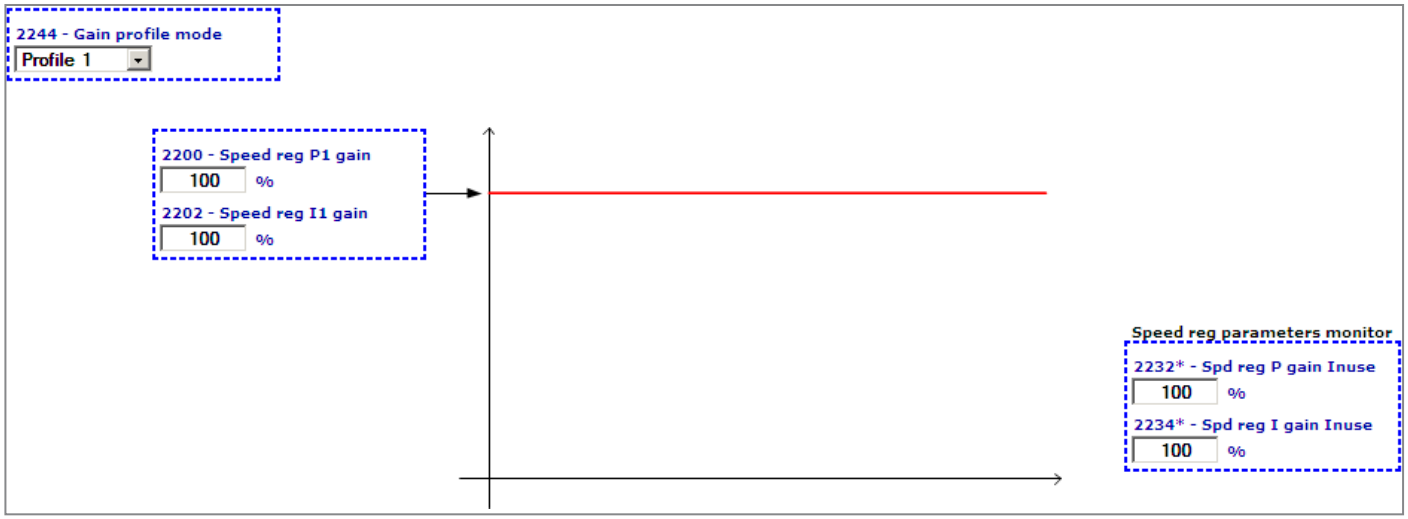


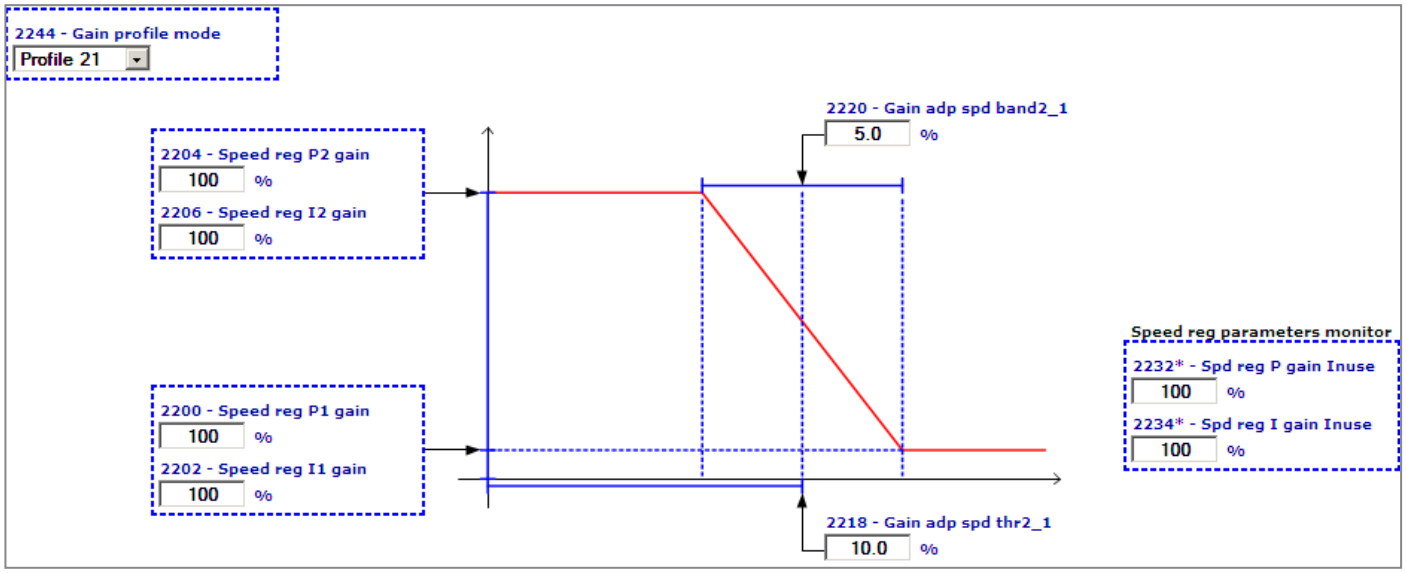

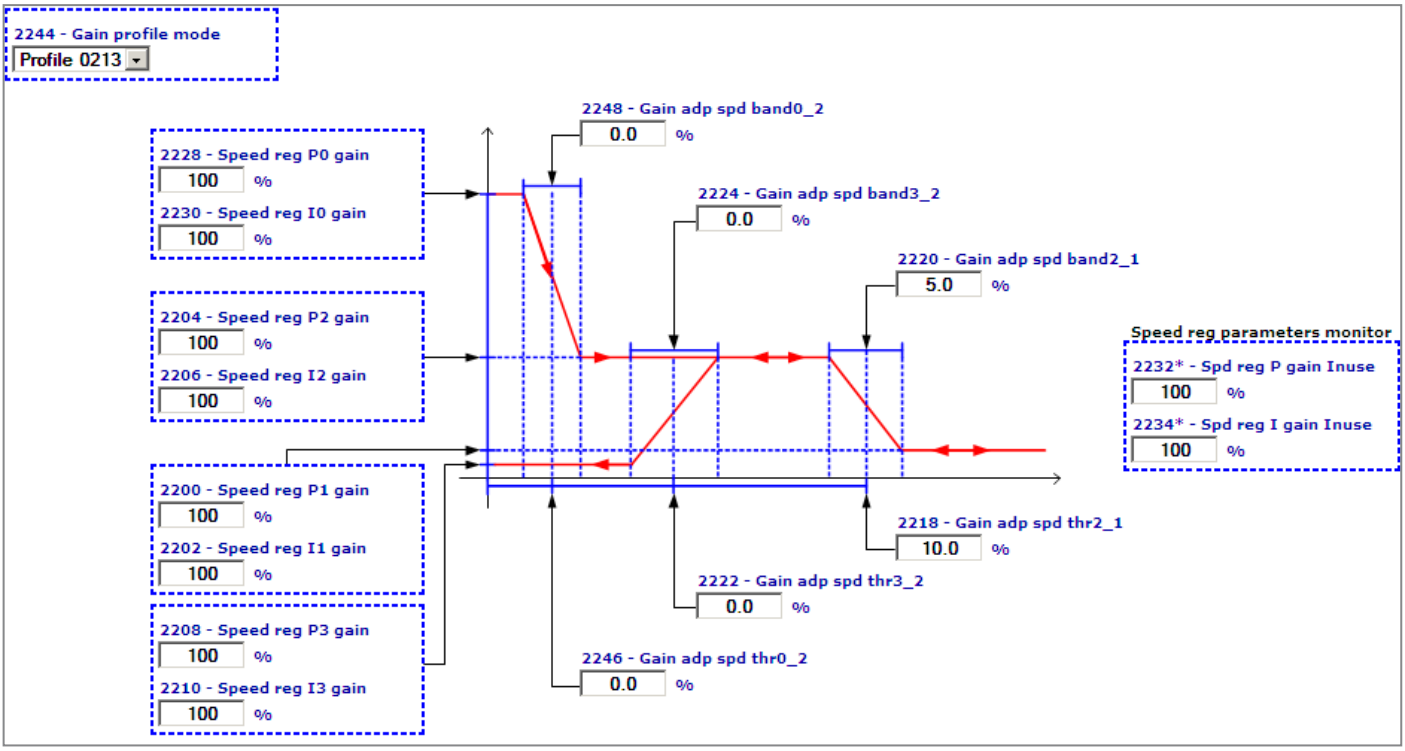
2244 - Gain profile mode
Profile 0213
2248 - Gain adp spd band0_2
0.0 %
2228 - Speed reg P0 gain
100 %
2230 - Speed reg I0 gain
100 %
2224 - Gain adp spd band3_2
0.0 %
2220 - Gain adp spd band2_1
5.0 %
2204 - Speed reg P2 gain
100 %
2206 - Speed reg I2 gain
100 %
Speed reg parameters monitor
2232* - Spd reg P gain Inuse
100 %
2234* - Spd reg I gain Inuse
100 %
2200 - Speed reg P1 gain
100 %
2202 - Speed reg I1 gain
100 %
2218 - Gain adp spd thr2_1
10.0 %
2222 - Gain adp spd thr3_2
0.0 %
2208 - Speed reg P3 gain
100 %
2210 - Speed reg I3 gain
100 %
2246 - Gain adp spd thr0_2
0.0 %

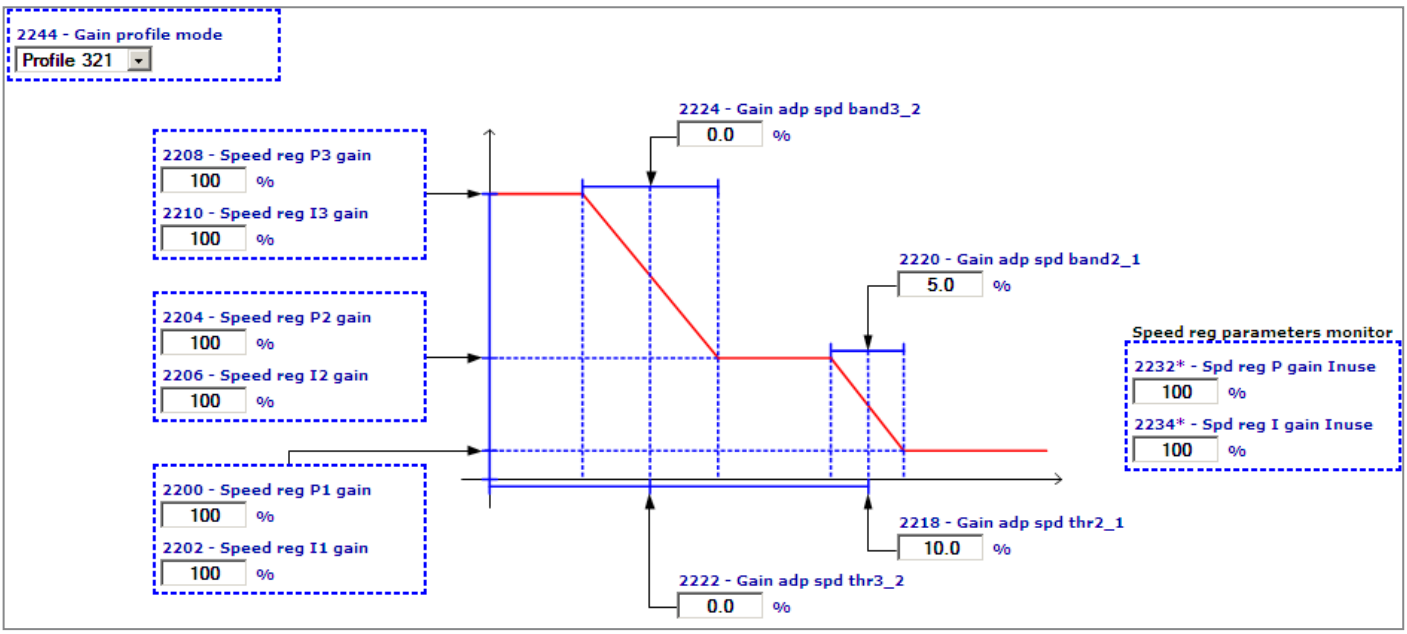
2244 - Gain profile mode
Profile 321
2224 - Gain adp spd band3_2
0.0 %
2208 - Speed reg P3 gain
100 %
2210 - Speed reg I3 gain
100 %
2220 - Gain adp spd band2_1
5.0 %
2204 - Speed reg P2 gain
100 %
2206 - Speed reg I2 gain
100 %
Speed reg parameters monitor
2232* - Spd reg P gain Inuse
100 %
2234* - Spd reg I gain Inuse
100 %
2200 - Speed reg P1 gain
100 %
2202 - Speed reg I1 gain
100 %
2218 - Gain adp spd thr2_1
10.0 %
2222 - Gain adp spd thr3_2
0.0 %

# Appendix - 1.0 CANopen interface

CANopen is a communication profile for CanApplicationLayer-based industrial systems.

The reference document is the "CANopen application layer and communication profile" CiA 301 Version 4.2.0 21 February 2011 by CAN in Automation e. V.

The drive also implements part of the DS417 Profile according to the specific CANopen Device Profile Drives and Motion Control V3.0.0 dated 14 December 2007.

The CAN protocol (ISO 11898) is CAN2.0A with an 11-bit identifier.

The integrated CANopen interface is developed as a "Minimum Field Device".

The data exchange is cyclic; the Master unit reads the Slave input data and writes the Slave output data.

**Note!** CANopen is only present in ADL2.0-...-C models.

## 1.1 CANopen functions

This chapter describes the controlled functions of the CANopen communication profile.

**Main features:**

1) The "Mandatory Protocol boot-up" is managed.
2) The SYNC function is implemented.
3) The PDO asynchronous assignment is managed.
4) The Node Guarding and HearthBeat protocols are managed.
5) The emergency message is managed ("EMERGENCY").
6) The Dynamic ID distribution function (DBT slave) is not managed.
7) A "Generic Pre-Defined Master/Slave connection" is implemented to simplify the Master tasks during the initialization phase.
8) "Inhibit-Times" (in units of 100 uS) can be modified.
9) The high-resolution synchronization is not supported.
10) "TIME STAMP" is not managed.
11) On the access of the structured parameters, the OFFhex option subindex (access to the whole object) is not managed.
12) In order to obtain a higher efficiency level, only the "Expedited" data transfer (max. 4 Bytes) of the SDO services is managed.
13) The "communication profile area" parameters are not saved by a save command, which on the other hand works on the "manufacturer-specific" and "profile" areas.

### *1.1.1 Pre-defined Master/Slave Connection*

The "Generic Pre-defined Master/Slave connection" allows a peer-to-peer communication between one Master and 127 Slaves; the Broadcast address is zero.

### *1.1.2 NMT Services (Network Management)*

The NMT "mandatory" services are:

- Enter_Pre-Operational_State CS = 128 (80h)
- Reset_Node CS = 129 (81h)

Performs an adjustment software reset command.

- Reset_Communication CS = 130 (82h)

Also the following NMT services are managed:

- Start_Remote_Mode CS = 1
- Stop_Remote_Mode CS = 2

The COB-ID * of an initialization NMT service is always at 0; CS is the Command Specifier defining the NMT service.

### *1.1.3 Monitoring*

The ADL300 drive supports the Node Guarding and HeartBeat mechanism. The Node Guarding configuration can be performed through the master via the standard Object Dictionary elements (1006h, 100Ch, 100Dh).

The Node Guarding threshold (maximum time between two NodeGuarding messages received from ADL) is calculated as:

"Guard time" x "LifeTime Factor"

The HeartBeat is configured by means of the objects 1016h and 1017h. The threshold in this case is calculated as:

"HeartBeat Time" x "LifeTime Factor".

Monitoring via NodeGuarding excludes monitoring via HeartBeat and vice versa: only one of the two systems can be active. The master must set the objects involved correctly.

The drive also checks the master's operation via the arrival of the Sync message (only if the "Communication Cycle period" is different from 0). The threshold (maximum time between two Sync messages received from ADL) is:

"Communication Cycle period" * "LifeTime Factor"

If one of the thresholds is exceeded, the drive changes the Operational status to Pre-Operational status, consequently generating the BusLoss alarm if it is also enabled.

| Index | Name | Default value |
|---|---|---|
| **1006h** | Communication Cycle Period | 64ms |
| **100Ch** | Guard Time | 100ms |
| **100D** | Life time factor | 3 (N.B.: this must always be different from 0) |
| **1016h** | Consumer heartbeat time | NodeId = 0 , time = 0 |
| **1017h** | Producer heartbeat time | 0 |

The default settings shown therefore correspond to the use of the NodeGuarding protocol with a threshold of 100ms x 3 and a threshold control even on Sync at 64ms x 3. The HeartBeat is disabled.

### *1.1.4 Communication objects*

This chapter describes the communication objects of the CANopen protocol; they are managed by the interface card.

The managed communication objects are:

1) 1 SDO reception Server.
2) 1 SDO transmission Server.
3) reception PDOs.
4) transmission PDOs.
5) 1 Emergency Object.
6) 1 Node Guarding - Life Guarding.
7) 1 SYNC object.

The following table lists the used communication objects with their priority level and the Message Identifier; the "Resulting COB-ID" is obtained by adding the Node-ID (card address) to the number.

| OBJECT | PRIORITY | MESSAGE ID |
|---|---|---|
| 1st SDO rx | 6 | 1792 700h+NodeId |
| 1st SDO tx | 6 | 1536 600h+NodeId |
| 1st PDO rx | 2 | 1408 580h+NodeId |
| 1st PDO tx | 2 | 512 200h+NodeId |
| 2nd PDO rx | 2 | 384 180h+NodeId |
| 2nd PDO tx | 2 | 768 300h+NodeId |
| 3st PDO rx | 2 | 640 280h+NodeId |
| 3st PDO tx | 2 | 512 400h+NodeId |
| 4th PDO rx | 2 | 384 380h+NodeId |
| 4th PDO tx | 2 | 768 500h+NodeId |
| EMERGENCY | 1 | 640 480h+NodeId |
| NODE GUARDING & HB | not used | 220 600h+NodeId |
| SYNC | 0 | 128 80h |

*Table 1.4.1: Communication Objects*

The master NodeGuarding message is a remote type (remote RTR bit set in COB-ID). All other messages used by this implementation of the CANopen are not RTR.

### *1.1.5 Object Dictionary Elements*

The Object Dictionary is accessible from a master CANopen and represents the set of objects used to configure, send and monitor size.

The following table shows the communication objects used and accessibility with master CANopen.

| Index (hex) | Name |
|---|---|
| 1000 | Device Type |
| 1001 | Error Register |
| 1002 | Manufacturer status register |

| | |
|---|---|
| 1005 | COB-ID SYNC Message |
| 1006 | Communication cycle period |
| 1008 | Manufacterer Device Name |
| 1010 | Store parameter |
| 1009 | Manufacturer Hardware Version |
| 100A | Manufacturer Software Version |
| 100C | Guard Time |
| 100D | Life Time Factor |
| 1014 | COB-ID Emergency |
| 1016 | HeartBeat time consumer |
| 1017 | HeartBeat time producer |
| 1018 | Identity object |
| 1029 | Error behavior object |
| 1400 | 1st Receive PDO |
| 1401 | 2nd Receive PDO |
| 1402 | 3rd Receive PDO |
| 1403 | 4th Receive PDO |
| **1600** | Receive PDO1 mapping parameter |
| **1601** | Receive PDO2 mapping parameter |
| **1602** | Receive PDO3 mapping parameter |
| **1603** | Receive PDO4 mapping parameter |
| **1A00** | Transmit PDO1 mapping parameter |
| **1A01** | Transmit PDO2 mapping parameter |
| **1A02** | Transmit PDO3 mapping parameter |
| **1A03** | Transmit PDO4 mapping parameter |
| 1800 | 1st Transmit PDO |
| 1801 | 2nd Transmit PDO |
| 1802 | 3rd Transmit PDO |
| 1803 | 4th Transmit PDO |

*Table1.5.1: Objects used by the CANopen communication profile*

**The objects shown in bold in the table allow writing of the parameters assigned with the exchange of data in the PDO.**

**The allocation criterion is variable, and depends on the size (in bytes) of the parameter exchanged.**

### *1.1.6 RX PDO Entries*

The structure of the PDO Communication Parameter (index 1400h, 1401h) is:

1) Subindex 0 (Number of supported entries ) = 2
2) The structure of Subindex 1 (COB-ID used by the PDO) is:

- Bit 31 (valid/invalid PDO) can be set via SDO.
- Bit 30 (RTR Remote Transmission Request) = 0 because this function is not supported.
- Bit 29 = 0 because the 11-bit ID is used (CAN 2.0A).
- Bits 11-28 are not used.
- Bit 0-10 COB-ID (see table 1.4.1).

3) Cyclic-synchronous Subindex 2 (Transmission Type), or synchronous according to the master performed setting (1 if SYNC has been foreseen, 254...255 if asynchronous). If not stated, the synchronous mode is active.

### *1.1.7 TX PDO Entries*

The structure of the PDO Communication Parameter (index 1800h, 1801h) is:

1) Subindex 0 (Number of supported entries ) = 3
2) The structure of Subindex 1 (COB-ID used by the PDO) is:

- Bit 31 (valid/invalid PDO) can be set via SDO.
- Bit 30 (RTR Remote Transmission Request) = 0 because this function is not supported.
- Bit 29 = 0 because the 11-bit ID is used (CAN 2.0A).
- Bits 11-28 are not used.
- Bit 0-10 COB-ID (see table 1.4.1).

3) Cyclic-synchronous Subindex 2 (Transmission Type), or synchronous according to the master performed setting (1 if SYNC has been foreseen, 254...255 if asynchronous). If not stated, the synchronous mode is active.
4) Inhibit time.

### *1.1.8 SDO Entries*

Only the “Expedited” data transfer mode (max. 4 Bytes) is used.

1) Subindex 0 (Number of supported entries ) = 3 because the device is a Server of the SDO service.
2) The structure of the Subindex 1 and 2 (COB-ID used by the SDO) is:

- Bit 31 (valid/invalid SDO); it is equal to 1 because just the Default SDOs are used.
- Bit 30 reserved = 0.
- Bit 29 = 0 because the 11-bit ID is used (CAN 2.0A).
- Bits 11-28 are not used.
- Bit 0-10 COB-ID (see table 1.4.1).

The element “node ID of SDO’s client resp. server” is not supported because just the Default SDOs are used.

### *1.1.9 COB-ID SYNC Entries*

The structure of the 32 bits contained in the COB-ID SYNC communication parameter is:

- Bit 31 = 1 because the CANopen interface card is a “consumer” of SYNC messages.
- Bit 30 = 0 because the interface card does not create SYNC messages.
- Bit 29 = 0 because the 11-bit ID is used (CAN 2.0A).
- Bits 11-28 are not used.
- Bit 0-10 COB-ID (see table 1.4.1).

### *1.1.10 COB-ID Emergency*

The structure of the 32 bits contained in the COB-ID Emergency Message communication parameter is:

- Bit 31 = 0 because the CANopen interface card is not a “consumer” of Emergency messages.
- Bit 30 = 0 because the interface card creates Emergency messages.
- Bit 29 = 0 because the 11-bit ID is used (CAN 2.0A).
- Bits 11-28 are not used.
- Bit 0-10 COB-ID (see table 1.4.1).

## 1.2 CANopen management

The user interface of the CANopen protocol is performed via the drive parameters. The parameters are controlled via hierarchical menus. All the writing parameters referring to the field bus are active only after the drive reset. Here following is a list of drive parameters useful to control the CANopen protocol.

To enable CANopen, set parameter PAR 4000 **Fieldbus type** to CANopen or DS417.

The following parameters are available in the COMMUNICATION->FIELDBUS CONFIG menu:

| PAR | Par Name | Type | Default value | Attr |
|---|---|---|---|---|
| 4004 | Fieldbus baudrate | Enum | None | Write |
| 4006 | Fieldbus address | 2 byte unsigned | 0 | Write |
| 4010 | Fieldbus M->S enable | Enum | On | Write |
| 4012 | Fieldbus alarm mode | 2 byte unsigned | 0 | Write |
| 4014 | Fieldbus state | Enum | Stop | Read only |

- Fieldbus baudrate = Sets the network baud rate. Values available for CANopen: 125k, 250k, 500k, 1M
- Fieldbus address = address of this slave node in the network, accepted values from 1 to 127
- Fieldbus M->S enable = if set to Off data in the RPDOs are not processed by the drive
- Fieldbus alarm mode = if set to 1 the drive generates Opt Bus Fault errors relating to the loss of communication (Bus Loss) even when the drive is not enabled.
- Fieldbus state = state of the communication for this node on the CANopen network: Stop, Pre-Operational, Operational.

## 1.3 Process Data Channel Control

This function allows to allocate the drive parameters or application variables to the Process Data Channel data.

As for the CANopen protocol, the PDC is performed via the PDO messages (Process data Object).

The CANopen protocol uses a number of words for the Process Data Channel (abbr. PDC Process Data Channel ), which can always be set.

The fieldbus Process Data Channel configuration is the following:

Data 0 Data... Data n

The drive can both read and write the Process Data Channel data.

A datum can be made both of 2 and 4 bytes. The word “data” refers to any quantity of bytes included between 0 and 16, if the byte total number required is not higher than 32.

*Example:*

It is possible to have:

- from 0 to 16 data with 2 bytes
- 1 datum with 4 bytes + from 0 to 14 data with 2 bytes
- 2 data with 4 bytes + from 0 to 12 data with 2 bytes

...

- 8 data with 4 bytes

The data exchanged via the PDC can be of two types:

- drive parameters
- variables of an MDPlc application. The use of the MDPlc variables is described in par. 1.3.1 and 1.3.2.

The master writes the data defined as PDC input and reads the data defined as PDC output.

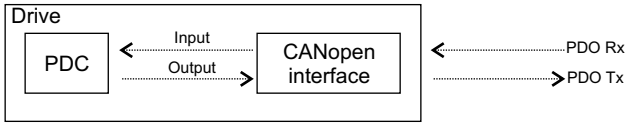


### *1.3.1 PDC Input Configuration (FB XXX MS Parameter)*

Data exchanged in RPDOs are configured using the parameters in the COMMUNICATION->FIELDBUS M2S menu.

PAR 4030 **Fieldbus M->S2 ipa =** IPA of the parameter to be exchanged

Must contain a valid IPA corresponding to the parameter to be written or 0 if sys (PAR 4032...4172 **Fieldbus M->Sn sys** ) is Fill or Mdplc; the parameter PAR 4020 **Fieldbus M->S1 ipa** must be assigned to the Lift Wdef Input, while the parameter PAR 4022 **Fieldbus M->S1 sys** must be set on Mdplc16

By selecting the corresponding enum PAR 4034 **Fieldbus M->S2 mon** for src type parameters (Source), the value of the parameter 4030 is automatically set at the IPA of the src.

For src type parameters with an FB type different from 0, the data arriving on the fieldbus is not written in the enum selection, but directly in the mon associated with the src.

If it contains a valid IPA and is forced to 0, the corresponding sys parameter takes on the Fill value (16 or 32 in relation to that shown before), ensuring that the structure of the exchanged data area is not modified.

PAR 4032 **Fieldbus M->S2 sys =** format of the data to be exchanged

This parameter is automatically changed to the recommended value when the corresponding PAR 4030...4170 **Fieldbus M->Sn ipa** is changed. The automatic value can be changed by the user, however, the permitted values depend on the parameter.

Data mapping in PDOs is performed on the basis of the data format set in Fieldbus M->Sn sys according to the following rules:

– PDOs are filled starting from RPDO1

– When the PDO contains 4 words it is full and the next RPDO is filled with a maximum of 4 PDOs

– 32-bit data (long or float) cannot be split among PDOs, they must be placed inside the PDO (an alarm is generated)

– PDOs containing fewer than 4 words can be created, using **Fieldbus M->Sn dest=** None but assigned (**Fieldbus M->Sn sys** other than Not Assigned, Fill16 or Fill32) after an assigned datum.

  (N.B.: if assigned as Fill16 or Fill32, the datum is included in the PDO anyway)

– At the first **Fieldbus M->Sn sys =** Not Assigned parameter the PDOs are complete. The size of the last PDO thus depends on the data that have been assigned.

– ***Example : RPDO1 di 2 word and RPDO2 di 2 word:***

**Fieldbus M->S1 dest** = Ramp ref 1 src
**Fieldbus M->S1 sys** = EU
**Fieldbus M->S2 dest** = Word decomp src
**Fieldbus M->S2 sys** = Count 16
**Fieldbus M->S3 dest** = None
**Fieldbus M->S3 sys** = Count 32
**Fieldbus M->S4 dest** = Compare 1 src
**Fieldbus M->S4 sys** = Count32
**Fieldbus M->S5 sys** = Not Assigned

### *1.3.2 PDC Output Configuration (FB XXX SM Parameter)*

Data exchanged in RPDOs are configured using the parameters in the COMMUNICATION->FIELDBUS S2M menu (refer to the drive manual).

Data mapping in PDOs is performed on the basis of the data format set in **Fieldbus M->Sn sys** according to the following rules:

– PDOs are filled starting from TPDO1
– When the PDO contains 4 words it is full and the next TPDO is filled with a maximum of 4 PDOs.
– 32-bit data (long or float) cannot be split among PDOs, they must be placed inside the PDO (an alarm is generated).
– PDOs with fewer than 4 words can be created, using Fieldbus S->Mn src= None Used but assigned (**Fieldbus M->Sn sys** other than Not Assigned, Fill16 or Fill32) after an assigned datum.
– At the first **Fieldbus S->Mn sys** = Not Assigned parameter the PDOs are complete. The size of the last PDO thus depends on the data that have been assigned.

### *1.3.3 Use of the PDC in MDPlc Applications*

It is possible to configure both the PDC input and output data in order to allow the data direct access via the MDPlc application code.

For read data simply set **Fieldbus M->Sn sys** to MDPLC16 or MDPLC32, leaving **Fieldbus M->Sn dest** = None.

The MDPLC application can now read the incoming datum directly from the **Fieldbus M->Sn mon** parameter.

Write data are configured by setting **Fieldbus S->Mn src** = Dig Fieldbus S->Mn.

**Fieldbus S->Mn sys** is automatically set to MDPLC. The application writes the datum in the **Dig Fieldbus S->Mn** parameter to send it to the bus.

## 1.4 SDO management

The SDO service is always available.

The drive parameters can be accessed via the “MSPA” Manufacturer Specific Profile Area (2000hex< index <5FFFhex).

The index to be shown in the SDO command to access a drive parameter is obtained via the following rules:

SDO index = PAR + 2000h

SDO subindex = 1

The Data field must contain the value of the drive parameter.

*Example:*

Writing the value 1m/s in the PAR 11020 **Multi speed 0 (**2B0C hex).

The following information is required:

1) The SDO index resulting from the formula is
   2000hex + 258hex = 2258h
2) The value to be written is 1, corresponding to 1 hex.
3) Parameter writing code = 22h
4) Parameter reading code = 40h
5) Sub-index = 01h

The ipaCan parameter and relative value is written by first inserting the lower part of the address in hexadecimal and then the higher part (Value to be written LL-LH-HL-HH).

**Example of value 1 writing:**

| MessageID | Writing Code | Lower part IpaCan | Higher part IpaCan | Subindex | Value of parameter LL | Value of parameter LH | Value of parameter HL | Value of parameter HH |
|---|---|---|---|---|---|---|---|---|
| 601h | 22h | 0Ch | 43h | 01h | 01h | 00h | 00h | 00h |
| | Byte 0 | Byte 1 | Byte 2 | Byte 3 | Byte 4 | Byte 5 | Byte 6 | Byte 7 |

In the event of success the following message is received:

| MessageID | Writing Code | Lower part IpaCan | Higher part IpaCan | Subindex | Value of parameter LL | Value of parameter LH | Value of parameter HL | Value of parameter HH |
|---|---|---|---|---|---|---|---|---|
| 601h | 60h | 0Ch | 43h | 01h | 01h | 00h | 00h | 00h |
| | Byte 0 | Byte 1 | Byte 2 | Byte 3 | Byte 4 | Byte 5 | Byte 6 | Byte 7 |

**Example of reading: with value 1**

| MessageID | Writing Code | Lower part IpaCan | Higher part IpaCan | Subindex | Not significant | Not significant | Not significant | Not significant |
|---|---|---|---|---|---|---|---|---|
| 601h | 40h | 0Ch | 43h | 01h | 00h | 00h | 00h | 00h |
| | Byte 0 | Byte 1 | Byte 2 | Byte 3 | Byte 4 | Byte 5 | Byte 6 | Byte 7 |

In the event of success the following message is received:

| MessageID | Reading code | Lower part IpaCan | Higher part IpaCan | Subindex | Value of data | | | |
|---|---|---|---|---|---|---|---|---|
| 601h | 43h | 0Ch | 43h | 01h | 01h | 00h | 00h | 00h |
| | Byte 0 | Byte 1 | Byte 2 | Byte 3 | Byte 4 | Byte 5 | Byte 6 | Byte 7 |

| Index | | Subindex | | | | |
|---|---|---|---|---|---|---|
| 0Ch | 4Bh | 01h | 01h | 00h | 00h | 00h |
| Drive parameter index | | Subindex | Drive parameter value to be assigned to SDO | | | |

In case an error occurs during the parameter reading or setting, the CANopen interface sends an Abort domain transfer message; the value of Application-error-codes has the following meanings:

| Error class | Error code | Additional code (hex) | Meaning |
|---|---|---|---|
| 6 | 0 | 0 | Parameter doesn't exist |
| 8 | 0 | 22 | Acces failed because of present device state |
| 6 | 1 | 2 | Read/Write only error |
| 8 | 0 | 0 | Generic error |
| 6 | 9 | 32 | Minimum value |
| 6 | 9 | 31 | Maximum value |
| 5 | 4 | 0 | SDO time_out |
| 5 | 4 | 1 | Invalid command |
| 3 | 9 | 30 | Invalid value |

## 1.5 Alarms

### Fieldbus alarms

The bus failure is signaled via the “Opt Bus Fault” alarm. As for CANopen, the possible failure causes are:

- “Bus-off” condition of the CAN line;
- the drive has not been enabled in the “Operational” mode;
- the “Life Guarding” threshold has been overcome.

This alarm becomes active only when the drive is enabled.

If ON, the PAR 4014 **Fieldbus alarm mode** parameter enables the generation of the “Field bus failure” alarm also when the drive is disabled.

| Codice | Cfg | Description | Actions |
|---|---|---|---|
| 0 | | Bus Loss | Check line for noise, terminations , problems with cabling |
| FF01 | * | Fieldbus type does not match expansion card | Please contact Technical Assistance. |
| FF02 | * | Wrong baudrate selected | Check “Fieldbus baudrate” is one of 125k, 250k, 500k, 1M |
| FF03 | * | Invalid address for node | Check “Fieldbus address” |
| FF04 | * | Error initializing CAN interface | Internal error, contact manufacturer |
| FF14..FF23 | * | Wrong object selected for mapping in channel M2S n | Check “Fieldbus M->Sn Dest |
| FF24..FF33 | * | More than 1 Src pointing to M2S Channel n | Check for multiple destinations on “Fieldbus M->Sn Dest” |
| FF34..FF43 | * | M2S Channel n , data size is wrong (16 bits on 32 bits or 32 bits on 16 bits parameter) | Check “Fieldbus M->Sn sys” |
| FF44..FF53 | * | Invalid parameter in channel S2M n | Check “Fieldbus S->Mn src” |
| FF54..FF63 | * | S2M Channel n , data size is wrong (16 bits on 32 bits or 32 bits on 16 bits parameter) | Check “Fieldbus S->Mn sys” |
| FF64..FF73 | * | Wrong object selected for mapping in channel S2M n | Check “Fieldbus S->Mn src” |
| FF74..FF83 | * | M2S Channel n : too many words in PDC | “Fieldbus M-Sn dest” & “Fieldubs M->Sn sys” address more than 16 words in PDC |
| FF84..FF93 | * | S2M Channel n : too many words in PDC | “Fieldbus S->Mn src” & “Fieldubs S->Mn sys” address more than 16 words in PDC |
| FFB4..FFC3 | * | Internal database error on channel n | Internal error, contact manufacturer |
| 8110 | | CAN msg overflow | Too many packets for selected baudrate |
| 8130 | | LifeGuard/HeartBeat error | Software timeout from master |
| FFC5 | | Wrong NMT message length | Check NMT packets |
| FFC6 | | Invalid NMT command | Check NMT packets |
| FFC7 | | CAN bus off | Check line state for problems |

### Drive alarm handling

Drive alarms are managed by means of an Emergency message containing the error code relating to the alarm that is generated, according to the table below:

| Selection | Code |
|---|---|
| No alarm | 0x0000 |
| Overvoltage | 0x3210 |
| Undervoltage | 0x3220 |
| Ground fault | 0x2110 |
| Overcurrent | 0x2310 |
| Desaturation | 0x2130 |
| MultiUndervolt | 0xFF06 |
| MultiOvercurr | 0xFF07 |
| TechnMultiDesat | 0xFF08 |
| Heatsink OT | 0x4210 |
| HeatsinkS OTUT | 0x4310 |
| Intakeair OT | 0x4130 |
| Motor OT | 0xFF0C |
| Drive overload | 0x8311 |
| Motor overload | 0x7121 |
| Bres overload | 0x7112 |
| Phaseloss | 0xFF10 |
| Opt Bus fault | 0xFF11 |
| Opt 1 IO fault | 0xFF12 |
| Opt Enc fault | 0x3130 |
| External fault | 0x9000 |
| Speed fbk loss | 0x7310 |
| Overspeed | 0x8400 |

| Selection | Code |
|---|---|
| Plc1 fault | 23 |
| Plc2 fault | 24 |
| Plc3 fault | 25 |
| Plc4 fault | 26 |
| Plc5 fault | 27 |
| Plc6 fault | 28 |
| Plc7 fault | 29 |
| Plc8 fault | 30 |
| Emg stop alarm | 31 |
| Watchdog | 32 |
| Trap error | 33 |
| System error | 34 |
| User error | 35 |
| Power down | 36 |
| Speed ref loss | 37 |
| Not Used1 | 38 |
| Opt 2 IO fault | 39 |
| Not Used2 | 40 |
| Not Used3 | 41 |
| Not Used4 | 42 |
| Not Used5 | 43 |
| Not Used6 | 44 |
| Param error | 45 |

## 1.6 Configuration example

This chapter provides an example of how to configure the parameters of ADL300 drives so that they can be read and written by a CANopen master via the processing channels (PDO). See the chapter 1.4 for the configuration channels (SDO).

The paragraph 1.6.1 provides the information required on a CANopen master controlling a machine. The paragraph 1.6.2 contains basic information for programming the ADL300 drive starting from the factory settings.

In this example, drive programming is performed using the GF-Express configurator. All operations can, of course, be performed via keypad.

### *1.6.1 CANopen Master*

This section contains an example of data exchange seen from the master side. This is the data normally contained in the machine specifications in the case of applications controlled by a CANopen master.

#### 1.6.1.1 Description of Master -> Slave PDO Communication

There are two parameters to be written via the processing channels. The first is a control word, in which the single bits contain certain commands (e.g. enable, start, etc. ). The second processing channel contains the ramp reference 1 (RampRef1) in rpm.

*CANopen PDO: Master -> Drive (max 16 word)*

| Position | Description | Format | Unit of Measure |
|---|---|---|---|
| Word1 M -> S | Control word | 16 bit Word | ... |
| Word2 M -> S | MultiSpeed 7 | Float | Rpm |
| Word3 M -> S | | | |
| ... | | | |
| ... | | | |
| Word16 M > S | | | |

*CONTROL WORD, Example:*

| Bit | Description | Remarks |
|---|---|---|
| 0 | EnableCmd | Enable command from CANopen master |
| 1 | StartFwdCmd | Start forward command |
| 2 | StartRevCmd | Start reverse command |
| 3 | Emergency mode | Emergency operation command |
| 4 | MltSpd S0 | Multi speed 0 sel |
| 5 | MltSpd S1 | Multi speed 1 sel |
| 6 | MltSpd S2 | Multi speed 2 sel |
| 7 | Free | |
| 8 | Free | |
| 9 | Free | |
| 10 | Free | |
| 11 | Free | |
| 12 | Free | |
| 13 | Free | |
| 14 | Free | |
| 15 | Free | |

#### 1.6.1.2 Description of PDO Slave -> Master Communication

The can master reads three parameters from the drive: the first two contain, respectively the two status words (Lift Status Word1 and Lift Status Word2) whose individual bits contain information of the drive's status (e.g. LiftEnable.). Only Lift Status Word1 is used by this application, Lift Status Word 2 can be omitted. The third parameter is the current speed in rpm.

*CANopen PDO Slave > Master (max 16 Word)*

| Position | Description | Format | Unit of Measure |
|---|---|---|---|
| Word1 S -> M | Status Word | 16 bit Word | BitWide |
| Word2 S -> M | Actual Speed | Int 16 bit | rpm |
| Word3 S -> M | | | |
| ... | | | |
| ... | | | |
| Word16 S -> M | | | |

Lift control outputs can usually be connected to the PAD parameters according to the table below:

| Bit | Description | Remarks |
|---|---|---|
| 0 | LiftEnable | Lift enable command. |
| 1 | RunCont | Run command contactor |
| 2 | UpCont | Up command contactor |
| 3 | DownCont | Down command contactor |
| 4 | BrakeCont | Brake command contactor |
| 5 | LiftDcBrake | DC brake function command (firmware) |
| 6 | Brake2 | Brake control signal (See sequences) |
| 7 | DoorOpen | Open door command |
| 8 | LiftStart | Lift start command |
| 9 | ----- | |
| 10 | Lift status word | Contains copy of the StatusWord (selectable via SelLiftStatWord) |
| 11 | ----- | |
| 12 | ----- | |
| 13 | ----- | |
| 14 | InputVariable | Connected to the input selector |
| 15 | LiftWdecInp | Connected to the LifWDecomp selector |
| 16 | | |

*LiftStatusWord (connected to Pad11)*

| Bit | Description | Remarks |
|---|---|---|
| 0 | LiftEnable | Lift enable command. |
| 1 | RunCont | Run command contactor |
| 2 | UpCont | Up command contactor |
| 3 | DownCont | Down command contactor |
| 4 | BrakeCont | Brake command contactor |
| 5 | LiftDcBrake | DC brake function command (firmware) |
| 6 | Brake2 | Brake control signal (See sequences) |
| 7 | DoorOpen | Open door command |
| 8 | Drive Ok | |
| 9 | SpeedIsZero | |
| 10 | SpeedRefIsZero | |
| 11 | | |
| 12 | | |
| 13 | | |
| 14 | | |
| 15 | (EPC Enable) | |

Outputs available directly on the drive:

- Drive OK
- SpeedIsZero

### *1.6.2 ADL300 Configuration*

The example given in this section is based on the assumption that the parameters of the ADL300 drive are the factory settings (**Default parameter** command). Use of the keypad is recommended for performing commissioning in the first phase (see the ADL300 “Quick start guide”). Then the motor should be moved using the digital input commands.

Similarly, a system start-up wizard must be available on the GF_Express configurator .

The programming sequence is as follows:

- **Fieldbus configuration**
- **Fieldbus M2S configuration**
- **LIFT\LIFT IN/OUT configuration**
- **Fieldbus S2M configuration**

#### 1.6.2.1 FIELDBUS CONFIG

This example shows the parameter settings to be performed with 500Kbaud CANopen and address 1.

- Menù 21.2- COMMUNICATION\FIELDBUS CONFIG.
- Example of configuration with **500Kbaud CANopen address 1**:

In the example, it is assumed that the drive is node 1 and the CANopen communication takes place with a baud rate of 500k. Make sure that all fieldbus settings and configurations are only effective after the drive's next reset.

Program the fieldbus menu parameters as shown in the following figure:

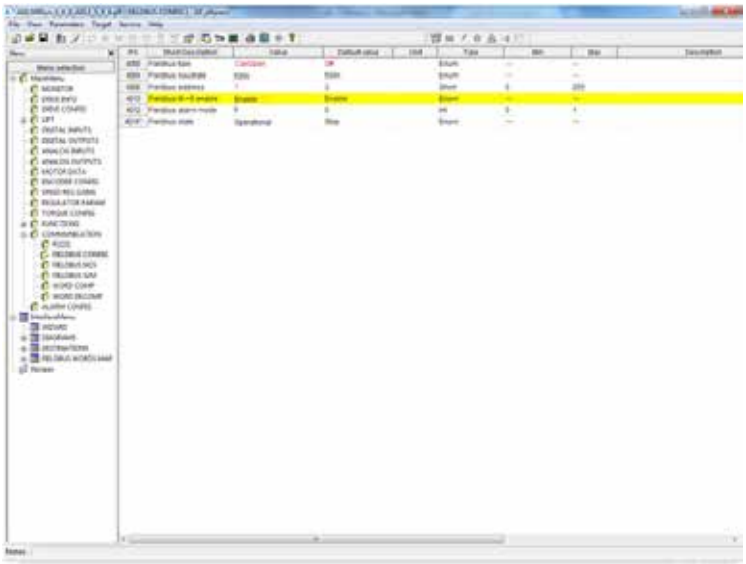

The status is pre-operational and the CAN led on the local Keypad is flashing.

Under these conditions, the process communication channels are not active.

At the end from the drive's programming (see below) and communication can be activated by the master through the NMT "start node" command.

Upon receipt of this command, the FieldBus parameter goes into the Operational condition and the CAN led on the keypad goes from flashing to fixed. Only at this point are the process channels active.

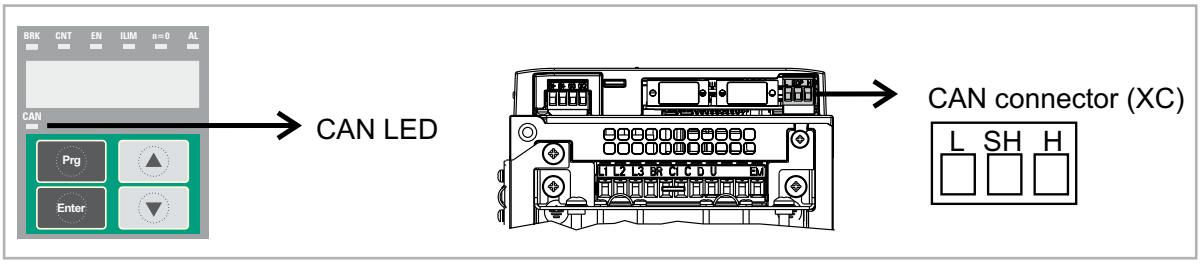


| Terminal | Name | Function | Cable cross-section |
|---|---|---|---|
| **L** | CAN_L | CAN_L bus line (low dominant) | 0.2 ... 2.5 $mm^2$<br>AWG 26 ... 12 |
| **SH** | CAN_SHLD | CAN shielding | |
| **H** | CAN_H | CAN_H bus line (high dominant) | |

| LEDs | Meaning |
|---|---|
| **CAN (green)** | |
| Off | Stop |
| Flashing | Pre-operational |
| On | Operational |

#### 1.6.2.2 Fieldbus M2S configuration

As regards communication through process channels (PDC), in the configuration in this example, the first channel is reserved for writing lift commands (writing of the control word).

Control word configuration is achieved by using an internal Lift Decomp parameter. The following figure shows the programming of this control word on the first word M → S. On the second word M → S, the **Multi-speed 7** [11034] parameter is programmed:

“Expert” mode:

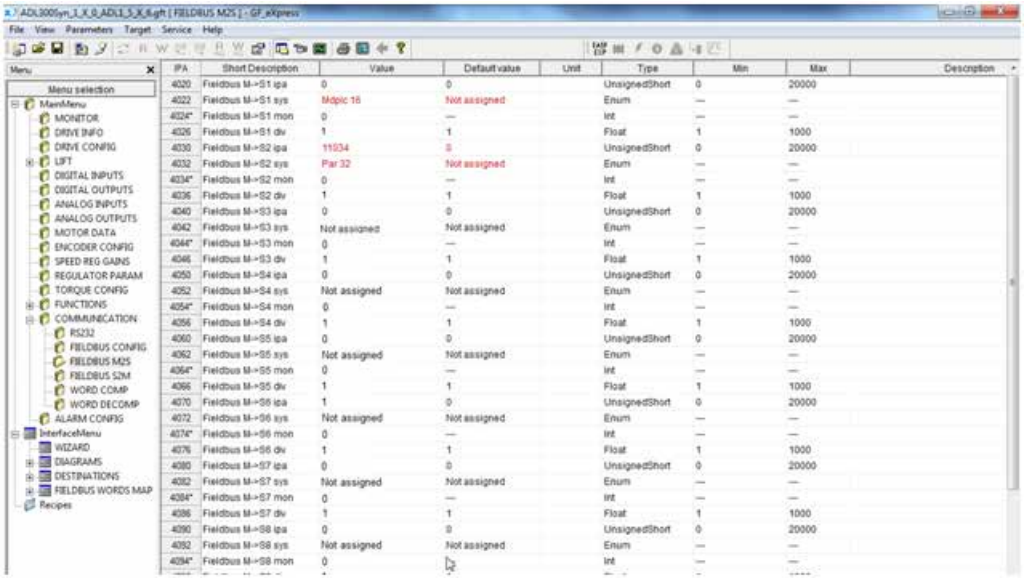

### 1.6.2.3 LIFT IN/OUT configuration

At this point, simply connect the individual Lift Decomp bits. Programming from the digital input to LIFT DECOMP LIFT/ INPUTS/OUTPUTS bit as shown in the figure below:

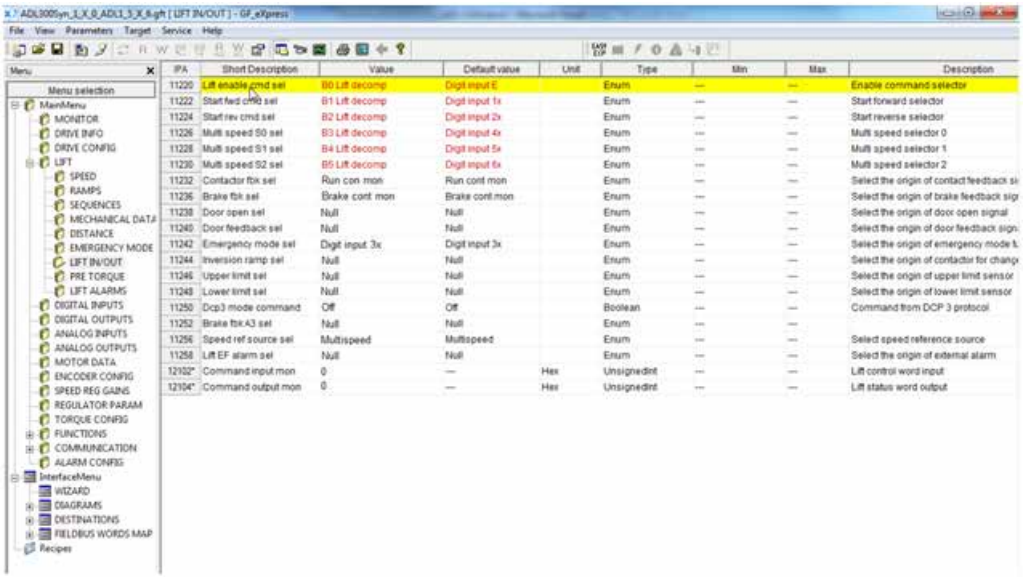

Now all lift sequences are controlled via the LiftWdecomp bits in the same way as described in the manual using digital inputs.

Parameter 12102 **Command input mon**, displays state of word in Hex.

After running a save command and switching the drive on again, you can check the correct configuration of channels M → S as shown in the figure:

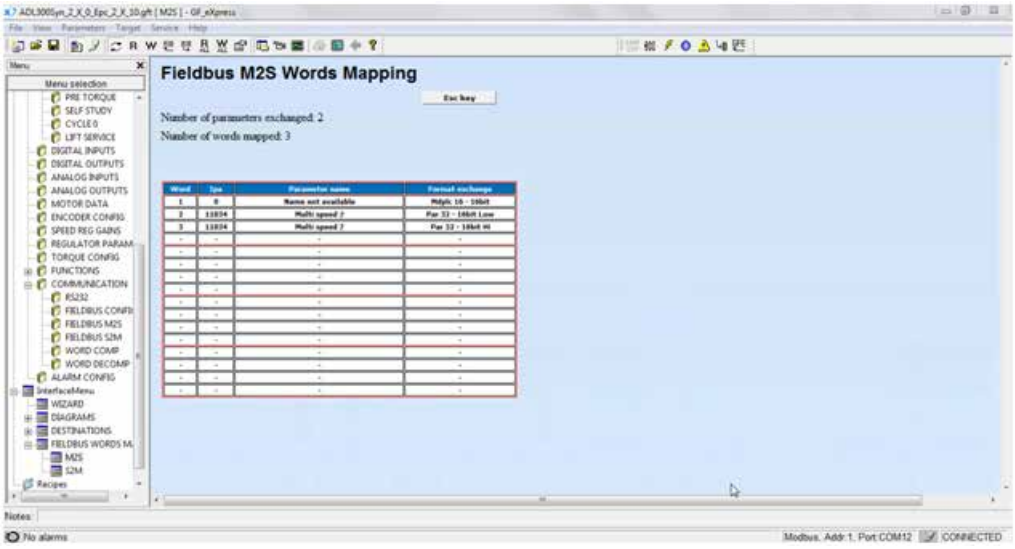

#### 1.6.2.4 Fieldbus S2M configuration

The configuration of these channels takes place in the Fieldbus S2M menu. Lift Status Word 1 and 2 are used to program the first and second process channels. Word 2 status can be omitted.

The third channel is programmed on the 260 parameter (**Motor Speed**).

The following figure shows the S→M programming of the example:

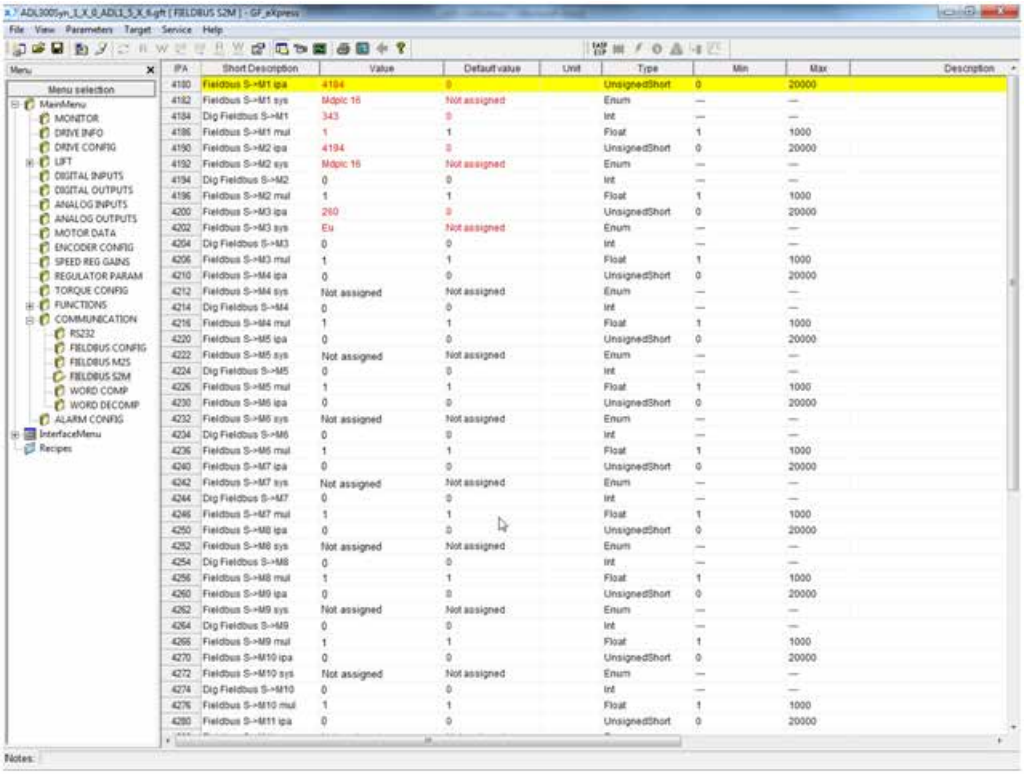

In a similar manner, after a drive save and restart, the correct Slave → Master channel programming can be checked:

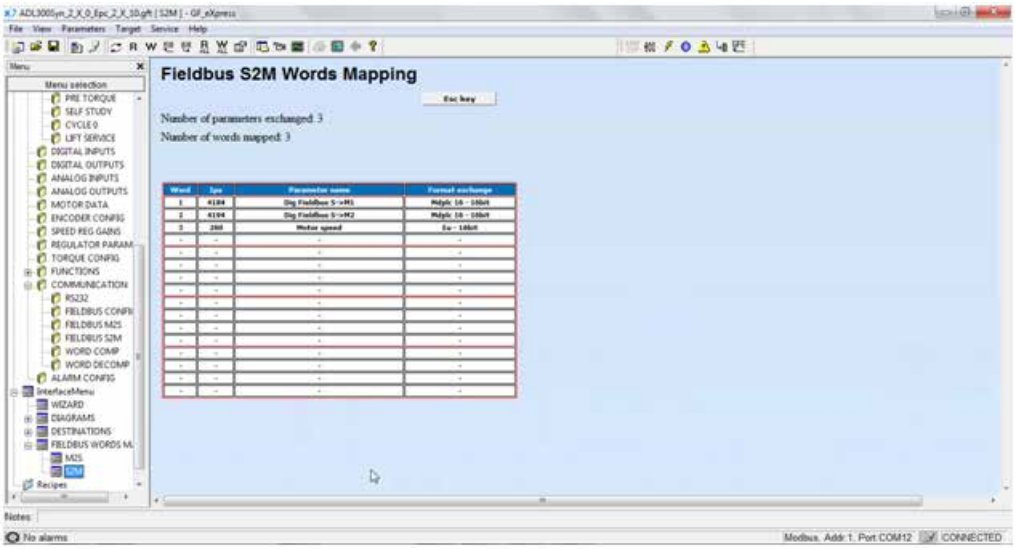

#### 1.6.2.5 Configuration check

A selection of communication checking notes/tips.

- PDO communication is only active in “On line Mode”. Check the status via GF-eXpress or a led on a local keypad.
- For Master -> Slave communication in FIELDBUS M2S menu, the value received from the communication channel can be checked (e.g. the parameter **Fieldbus M->S1 mon** [4024] is for the first channel).
- If communication is in EU (engineering units), remember that the value read on FIELDBUS M2S is in internal units.

#### 1.6.2.6 Configuration errors

If a mistake has been made in configuring a channel, the “Option bus fault” drive alarm is activated upon starting up and provides an error code indicating the channel which has generated the alarm. The list of error codes is available in chapter 1.5 of this appendix.

With GF-eXpress simply connect to the relevant HTML page as shown in the following figure:

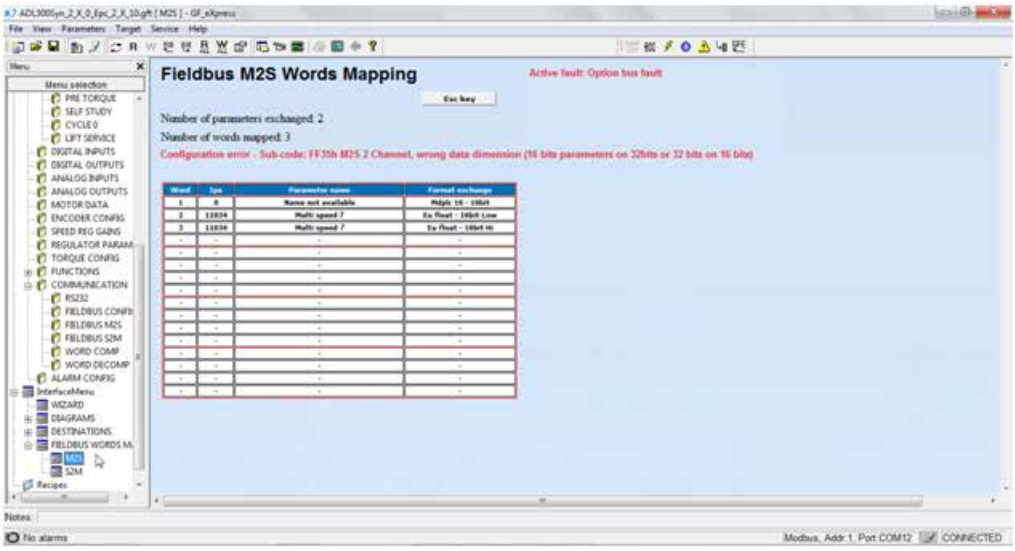


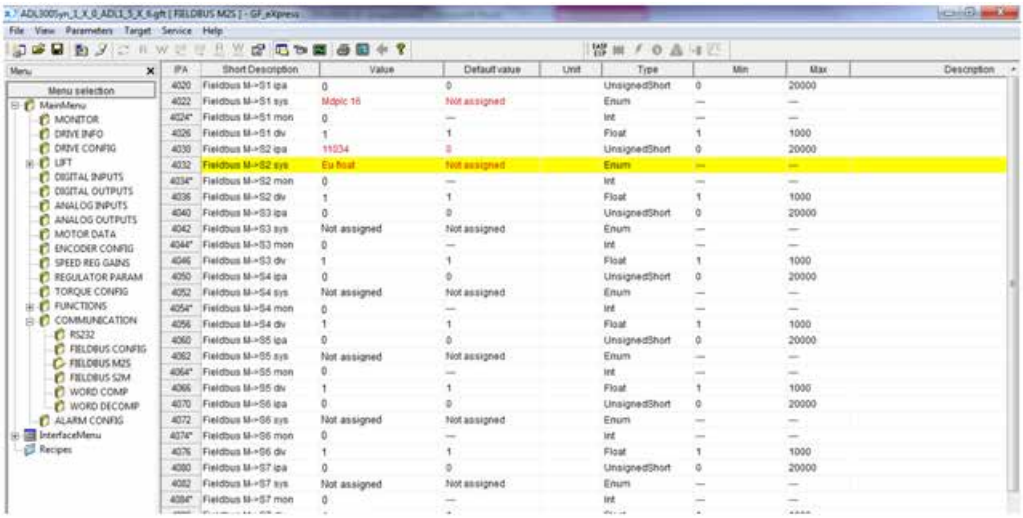

# Gefran worldwide

**GEFRAN DEUTSCHLAND GMBH**
Philipp-Reis-Straße 9a
D-63500 Seligenstadt
Ph. +49 (0) 61828090
Fax +49 (0) 6182809222
vertrieb@gefran.de

**SIEI AREG - GERMANY**
Gottlieb-Daimler Strasse 17/3
D-74385 - Pleidelsheim
Ph. +49 (0) 7144 897360
Fax +49 (0) 7144 8973697
info@sieiareg.de

**SENSORMATE AG**
Steigweg 8,
CH-8355 Aadorf, Switzerland
Ph. +41(0)52-2421818
Fax +41(0)52-3661884
http://www.sensormate.ch

**GEFRAN FRANCE SA**
PARC TECHNOLAND
Bâtiment K - ZI Champ Dolin
3 Allée des Abruzzes
69800 Saint-Priest
Ph. +33 (0) 478770300
Fax +33 (0) 478770320
commercial@gefran.fr

**GEFRAN BENELUX NV**
ENA 23 Zone 3, nr. 3910
Lammerdries-Zuid 14A
B-2250 OLEN
Ph. +32 (0) 14248181
Fax +32 (0) 14248180
info@gefran.be

**GEFRAN UK LTD**
Clarendon Court
Winwick Quay
Warrington
WA2 8QP
Ph. +44 (0) 8452 604555
Fax +44 (0) 8452 604556
sales@gefran.co.uk

**GEFRAN MIDDLE EAST ELEKTRIK VE ELEKTRONIK SAN. VE TIC. LTD. STI**
Yesilkoy Mah. Ataturk
Cad. No: 12/1 B1 Blok K:12
D: 389 Bakirkoy /Istanbul
TURKIYE
Ph. +90212 465 91 21
Fax +90212 465 91 22

**GEFRAN SIEI**
Drives Technology Co., Ltd
No. 1285, Beihe Road, Jiading
District, Shanghai, China 201807
Ph. +86 21 69169898
Fax +86 21 69169333
info@gefran.com.cn

**GEFRAN SIEI - ASIA**
31 Ubi Road 1
#02-07, Aztech Building,
Singapore 408694
Ph. +65 6 8418300
Fax +65 6 7428300
info@gefran.com.sg

**GEFRAN INDIA**
Survey No. 191/A/1,
Chinchwad Station Road,
Chinchwad,
Pune-411033, Maharashtra
Ph. +91 20 6614 6500
Fax +91 20 6614 6501
gefran.india@gefran.in

**GEFRAN INC.**
8 Lowell Avenue
WINCHESTER - MA 01890
Toll Free 1-888-888-4474
Fax +1 (781) 7291468
info.us@gefran.com

**GEFRAN BRASIL**
ELETROELETRôNICA
Avenida Dr. Altino Arantes,
377 Vila Clementino
04042-032 SÃO PAULO - SP
Ph. +55 (0) 1155851133
Fax +55 (0) 1132974012
comercial@gefran.com.br

GEFRAN

**GEFRAN S.p.A.**
Via Sebina 74
25050 Provaglio d'Iseo (BS) ITALY
Ph. +39 030 98881
Fax +39 030 9839063
info@gefran.com
www.gefran.com

**GEFRAN DRIVES AND MOTION S.R.L.**
Via Carducci 24
21040 Gerenzano (VA) ITALY
Ph. +39 02 967601
Fax +39 02 9682653
info.motion@gefran.com

**Technical Assistance :**
technohelp@gefran.com

**Customer Service :**
salesmotion@gefran.com

**Manuale ADL300 ASY FP -EN**
Rev. 1.0 - 30-11-2018
1S9FEN